SoM-9G25M

Embedded System on Module (SoM)

Features

- Atmel ARM9 AT91SAM9G25 400 MHz
- Up to 128 MB DDR2, Up to 32 MB Serial Data Flash
- SD/MMC Flash Card Interface on Carrier
- Up to 512 MB NAND Flash
- Ethernet, A/D, SPI, I2C, I2S PWM, GPIO
- 3x USB, 6x Serial Ports & 1x SDIO Port
- Wide Temperature -40° to + 85° C

Specifications

Processor	Atmel ARM9 AT91SAM9G25 Low Power Fanless Processor
	400 MHz
Memory	Up to 128 MB DDR2
	256 MB NAND Flash
	Up to 512 MB NAND Flash (Minimum order quantity applies)
	Up to 32 MB Serial Data Flash
	SDHC SD/MMC Flash Card Port/Interface (on Carrier)
I/O	18x GPIO
	1x SDIO Port
	1 I2S Audio Port
	1x 10/100 BaseT Ethernet with on-board PHY
	1x USB 2.0 High Speed Host Port
	1x USB 2.0 High Speed Device Port
	1x USB 2.0 Full Speed Host Port
	6x Serial ports, 3 with handshake
	2x SPI Ports
	4x Timer/Counters/PWM
	2x I2C Ports
Analog	5x A/D Channels with 10-bit A/D Converter
Bus Expansion	Local ARM
OS	EMAC OE Embedded Linux
Dimensions	Small 144 pin SODIMM form factor 2.66" x 1.5" (67mm × 38mm)
Power Req.	3.3 V
	Typical Running Current Consumption 200mA
Environment	-40° to + 85° C Industrial Wide Temperature
	90% Upper Operating Humidity

Block Diagram

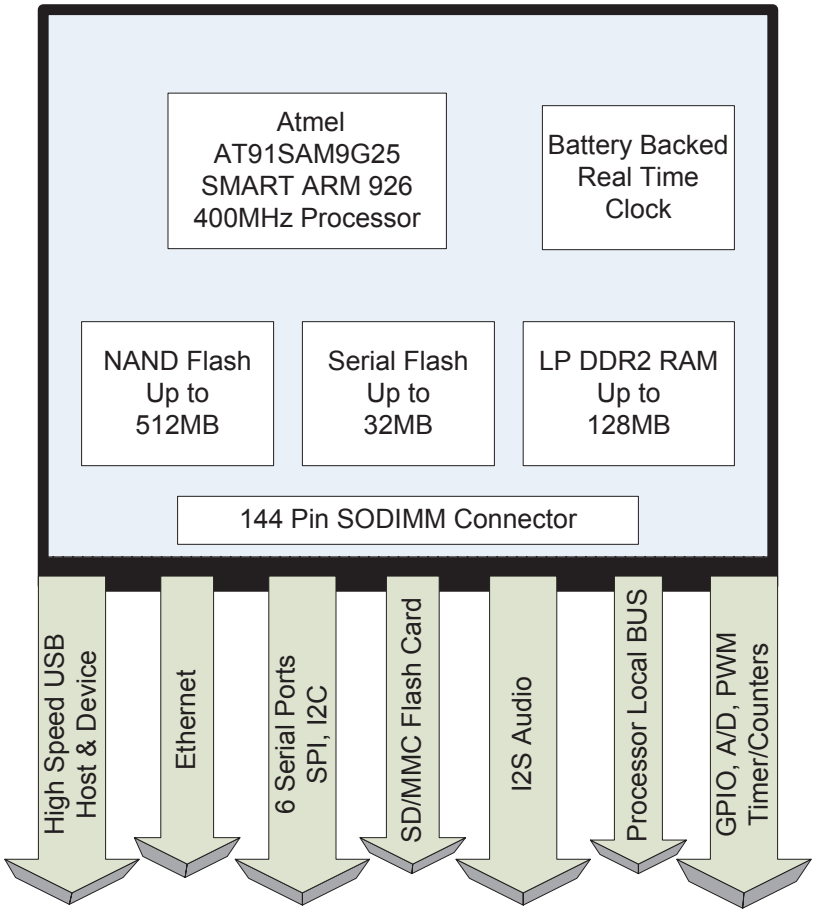

Ordering Information

PRODUCT #	CPU	MEMORY	SERIAL	GPIO	USB	ANALOG	LAN	TEMPERATURE
SoM-9G25M-111	Atmel ARM9 AT91SAM9G25 400 MHz	64MB DDR RAM 256MB NAND 8MB Serial Flash	6x	18x	1x HS Host 1x HS Device 1x FS Host	5x 10-Bit A/D Channels	1x 10/100 Base-T	-40° to + 85° C
SoM-9G25M-122 BUILD TO ORDER	Atmel ARM9 AT91SAM9G25 400 MHz	128MB DDR RAM 256MB NAND 8MB Serial Flash	6x	18x	1x HS Host 1x HS Device 1x FS Host	5x 10-Bit A/D Channels	1x 10/100 Base-T	-40° to + 85° C

Carrier Board Options

PRODUCT #	DESCRIPTION
SoM-150ES-000	Standard Carrier Board
SoM-150ES-007	Bare-Bones Carrier Board
SoM-150ES-031	Deluxe Carrier with A/D, D/A, Audio