# COMe-cAL6 (E2)

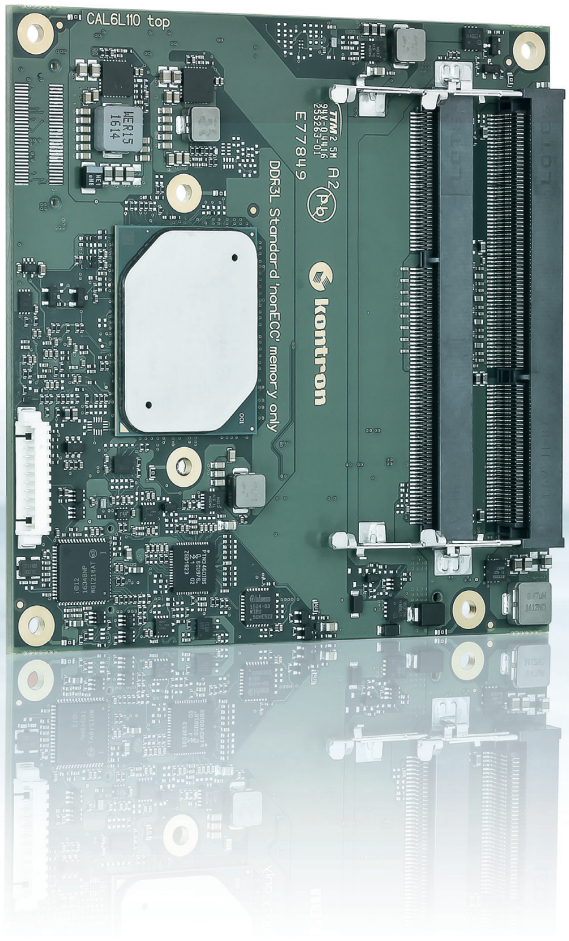


## COM Express® COMPACT TYPE 6 WITH LATEST GENERATION Intel® Atom™, Pentium® AND Celeron® PROCESSORS

- Low-power – performance/watt optimized form factor solution
- Up to 8 GByte DDR3L 1600 / 1867 Memory (2x SODIMM socket)
- 4x USB 3.0/2.0, 4x USB 2.0, 2x SATA, eMMC Flash
- Industrial grade temperature
- Support of Kontron's Embedded Security Solution - APPROTECT (optional)

## TECHNICAL INFORMATION

| | |
|---|---|
| COMPLIANCE | COM Express® compact, Pin-out Type 6 |
| DIMENSIONS (W X D) | 95 x 95 mm |
| CPU | Intel® Atom™ x7-E3950, 4C, 1.6 / 2.0 GHz, 12 W TDP<br>Intel® Atom™ x5-E3940, 4C, 1.6 / 1.8 GHz, 9.5 W TDP<br>Intel® Atom™ x5-E3930, 2C, 1.3 / 1.8 GHz, 6.5 W TDP<br>Intel® Pentium® N4200, 4C, 1.1 / 2.5 GHz, 6 W TDP<br>Intel® Celeron® N3350, 2C, 1.1 / 2.4 GHz, 6 W TDP |
| CHIPSET | - |
| MAIN MEMORY | 2x SODIMM for DDR3L-1600/1867 (non ECC) up to 8 GByte |
| GRAPHICS CONTROLLER | Intel HD Gfx Gen9: 1x LVDS/eDP (3840 x 2160 @ 60 Hz)<br>2x DP (++) on DDI1/DDI2 up to 4K |
| ETHERNET CONTROLLER | Intel® I210IT / I211AT |
| ETHERNET | 10/100/1000 MBit Ethernet |
| HARD DISK | 2x SATA 6Gb/s, SDIO Interface (shared with GPIO) |
| FLASH ONBOARD | 32 GByte eMMC SLC<br>on request:<br>- up to 64 GByte eMMC SLC<br>- up to 128 GByte eMMC MLC |
| PCI EXPRESS® SUPPORT | 3x PCIe x1<br>on request:<br>- w/ LAN and PCIe hub: 5x PCIe x1 or 1x PCIe x2 + 3x PCIe x1<br>- w/o LAN and PCIe hub: 2x PCIe x2 or 1x PCIe x4 |
| PANEL SIGNAL | DDI 1/2: DP++, LVDS: Single Channel 18/24 bit or eDP on request) |
| USB | 4x USB 3.0/2.0, 4x USB 2.0 (3x USB 2.0 w/o Security Chip) |
| SERIAL | 2x serial interface (RX/TX only) |
| AUDIO | Intel® High Definition Audio |
| COMMON FEATURES | SPI, LPC, SMB, Fast I²C, Staged Watchdog, RTC |
| BIOS | AMI Aptio V |
| HUMIDITY | 93 % relative Humidity at 40 °C, non-condensing (according to IEC 60068-2-78) |
| FEATURES ON REQUEST | PCIe configurations w/ PCI hub and w/o LAN chip<br>Security Chip (Support of Kontron APPROTECT)<br>eMMC Flash configuration<br>eDP instead of LVDS<br>General Purpose SPI instead of Boot SPI<br>FSP + Coreboot, AES-NI, USB client |
| POWER MANAGEMENT | ACPI 4.0, S5 Eco |
| POWER SUPPLY | 8.5 V – 20 V Wide Range, Single Supply Power |
| SPECIAL FEATURES | POSCAP capacitors, Trusted Platform Module TPM 2.0,<br>microSD card socket<br>4k Resolutions, GPIO/SDIO Switch, Industrial grade temperature |
| OPERATING SYSTEM | Windows® 10, Enterprise, Windows 10 IoT, Linux, VxWorks 7.x |
| TEMPERATURE | COMe-cAL6 - commercial temperature:<br>0 °C to +60 °C operating, -30 °C to +85 °C non-operating<br>COMe-cAL6 E2 - industrial temperature:<br>-40 °C to +85 °C operating, -40 °C to +85 °C non-operating |
| SUPPORTED MODULES | COMe-cAL6 / COMe-cAL6 E2 |

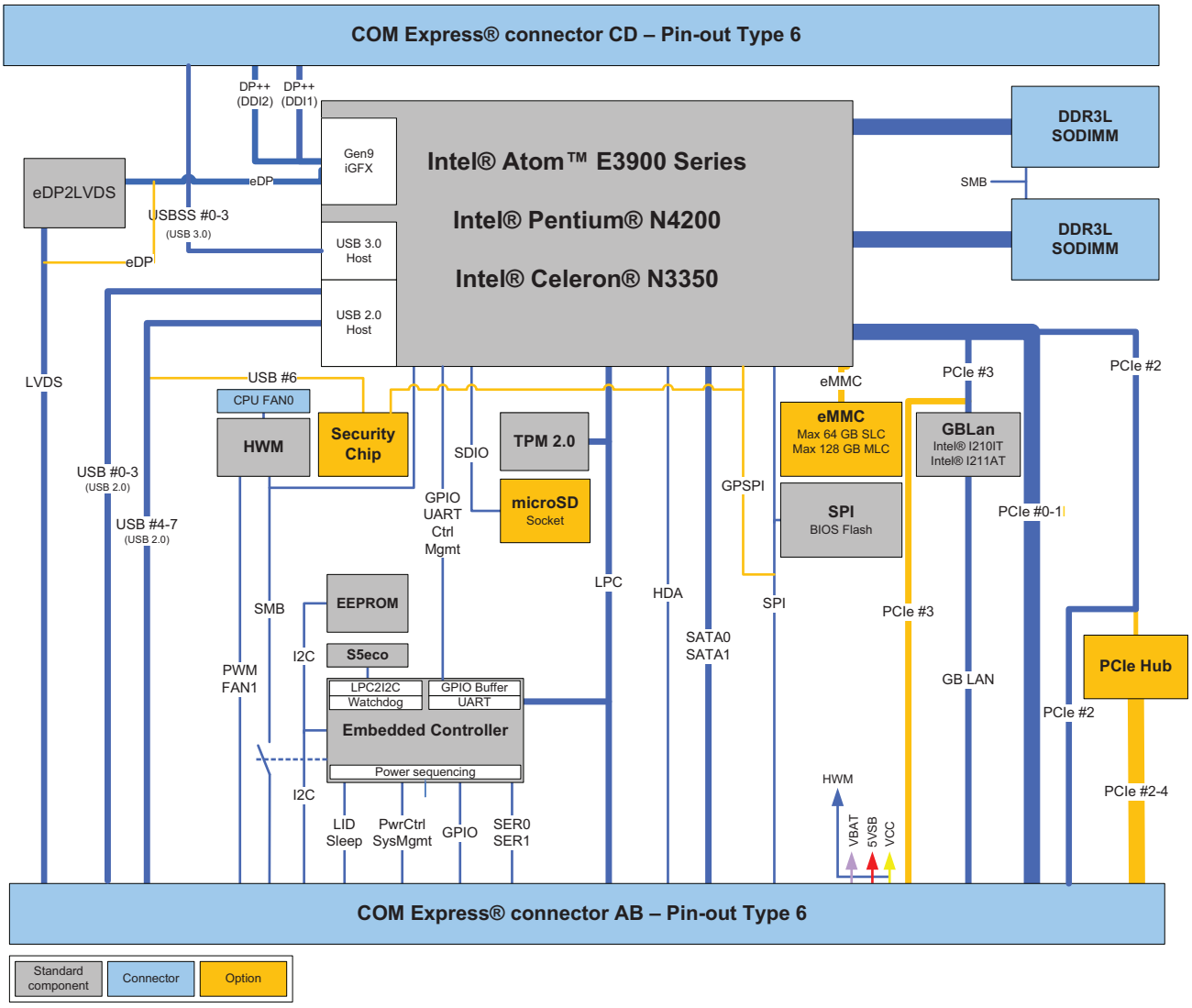
COM Express® connector CD – Pin-out Type 6
DP++ (DDI2)
DP++ (DDI1)
eDP2LVDS
eDP
USBSS #0-3
(USB 3.0)
eDP
Gen9 iGFX
USB 3.0 Host
USB 2.0 Host
Intel® Atom™ E3900 Series
Intel® Pentium® N4200
Intel® Celeron® N3350
DDR3L SODIMM
SMB
DDR3L SODIMM
LVDS
USB #6
CPU FAN0
HWM
Security Chip
SDIO
TPM 2.0
microSD Socket
GPIO UART Ctrl Mgmt
USB #0-3
(USB 2.0)
USB #4-7
(USB 2.0)
eMMC
eMMC Max 64 GB SLC Max 128 GB MLC
GPSPI
SPI BIOS Flash
PCIe #3
GBLan Intel® I210IT Intel® I211AT
PCIe #2
PCIe #0-1
LPC
HDA
SPI
PCIe #3
SMB
EEPROM
I2C
S5eco
PWM FAN1
LPC2I2C
Watchdog
GPIO Buffer
UART
Embedded Controller
Power sequencing
SATA0
SATA1
GB LAN
PCIe Hub
PCIe #2
PCIe #2-4
I2C
LID Sleep
PwrCtrl SysMgmt
GPIO
SER0 SER1
HWM
VBAT
5VSB
VCC
COM Express® connector AB – Pin-out Type 6
Standard component
Connector
Option