COMe-bHL6

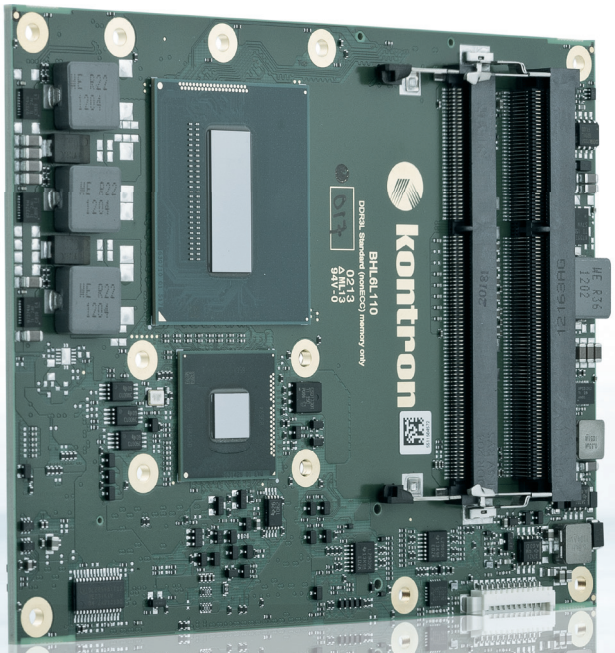

COM Express® BASIC TYPE 6
WITH 4TH GENERATION Intel® Core™ PROCESSORS

- Intel® 4th Generation Core™ i7/i5/i3/Celeron series with QM87/HM86 PCH
- with non-ECC DDR3L up to 16GB
- triple independent diplay support with daisy-chaining and 4k resolutions

TECHNICAL INFORMATION
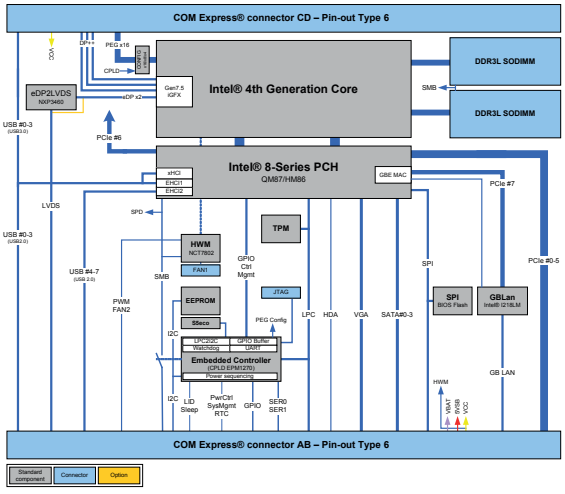
COMPLIANCE	COM Express® basic, Pin-out Type 6
DIMENSIONS (H X W X D)	125 x 95 mm
CPU	Intel® Core™ i7-4860EQ, Intel® Core™ i7-4850EQ, Intel® Core™ i7-4700EQ, Intel® Core™ i5-4400E, Intel® Core™ i5-4402E, Intel® Core™ i3-4100E, Intel® Core™ i3-4102E, Intel® Celeron® 2000E, Intel® Celeron® 2002E
CHIPSET	Intel® Mobile QM87 (Core™ i5, i7) Intel® Mobile HM86 (Core™ i3 & Celeron®)
MAIN MEMORY	2x DDR3L-1600 SO-DIMM up to 2x8GB
GRAPHICS CONTROLLER	Intel® HD5200 (GT3e), Intel® HD4600 (GT2), Intel® HD Graphics (GT1)
ETHERNET CONTROLLER	Intel® I218LM
ETHERNET	10/100/1000 MBit Ethernet
HARD DISK	QM87: 3x SATA 6Gb/s, 1x SATA 3Gb/s HM86: 2x SATA 6Gb/s, 2x SATA 3Gb/s
FLASH ONBOARD	-
PCI EXPRESS® / PCI SUPPORT	7x PCIe x1, 1x PEG x16
PANEL SIGNAL	DDI1: DP++, DDI2: DP++, DDI3: DP++, VGA: Yes, LVDS: Dual Channel 18/24bit
USB	4x USB 3.0 + 4x USB 2.0
SERIAL	2x serial interface (RX/TX only)
AUDIO	Intel® High Definition Audio
COMMON FEATURES	SPI, LPC, SMB, Fast I²C, Staged Watchdog, RTC, MARS
BIOS	Phoenix Secure Core UEFI
HUMIDITY	93% relative Humidity at 40°C, non-condensing (according to IEC 60068-2-78)
OPTIONS	1x PCIe x1 additional w/o onboard LAN, vPRO (AMT/TXT/AES Support), eDP instead of LVDS
POWER MANAGEMENT	ACPI 4.0, S5 Eco
POWER SUPPLY	8.5V – 20V Wide Range, Single Supply Power
SPECIAL FEATURES	POSCAP capacitors, Trusted Platfom Module TPM 1.2, 4k Resolutions, Flexible PEG lane configuration by Setup Option
OPERATING SYSTEM	Windows® 8, Windows® 7, WE8S, WES7, Linux, VxWorks
TEMPERATURE	Commercial temperature: 0°C to +60°C operating, -30°C to +85°C non-operating Extended temperature: -25°C to +75°C operating, -30°C to +85°C non-operating