Our Products Make Your Product Better®

To learn more about EMAC's products and services and how they can help your project

http://ftp.emacinc.com/Tech_Info/About_EMAC_Products_and_Services.pdf

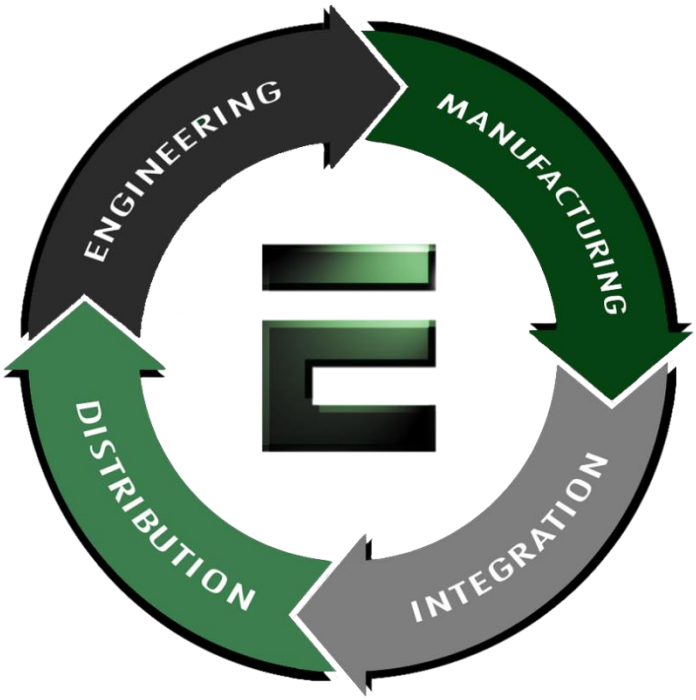

Authorized Distributor, Integrator, and Value-Added Reseller

Manual downloaded from ftp.emacinc.com

For purchase information please contact info@emacinc.com

For technical support please submit a ticket at www.emacinc.com/support

VDX-6353RD / VDX-6353RD-512

DM&P Vortex86DX 800MHz

PC/104 CPU Module

with 4S/2USB/VGA/LCD/LVDS/LAN/GPIO/CF/PWMx16

256MB DDR2 Onboard

User's Manual

(Revision 1.1A)

Copyright

The information in this manual is subject to change without notice for continuous improvement in the product. All rights are reserved. The manufacturer assumes no responsibility for any inaccuracies that may be contained in this document and makes no commitment to update or to keep current information contained in this manual.

No part of this manual may be reproduced, copied, translated or transmitted, in whole or in part, in any form or by any means without the prior written permission of the ICOP Technology Inc.
©Copyright 2008 ICOP Technology Inc.
Manual No. IUM6353D000-01 Ver.1.0A December, 2010
Manual No. IUM6353RD000-01 Ver.1.1A October, 2014

Trademarks Acknowledgment

Vortex86DX™ is the registered trademark of ICOP Technology Inc.

Other brand names or product names appearing in this document are the properties and registered trademarks of their respective owners. All names mentioned herewith are served for identification purpose only.

Table of Contents

Table of Contents iii
Chapter 1 Introduction 1
1.1 Packing List 1
1.2 Product Description 1
1.3 Specifications 3
1.4 Board Dimension 5

Chapter 2 Installation 6
2.1 Board Outline 6
2.2 Connectors & Jumpers Location 7
2.3 Connectors & Jumpers Summary 9
2.4 Pin Assignments & Jumper Settings 11
2.5 System Mapping 20
2.6 Watchdog Timer 23
2.7 GPIO 24
2.8 SPI flash 25
2.9 PWM 26
3.0 IDE to SD 27

Chapter 3 Driver Installation 28

Appendix 29
A. TFT Flat Panel Data Output 29
B. TFT Flat Panel Support List 30
C. LVDS Flat Panel Support List 32
D. Flat Panel Wiring and Lighting 33
E. TCP/IP library for DOS real mode 34
F. BIOS Default Setting 35

Warranty 36

This page is blank

Chapter 1

Introduction

1.1 Packing List

Product Name	Package
VDX-6353RD & VDX-6353RD-512	• Embedded Vortex86DX CPU All-in-One Board • Manual & Drivers CD x 1 • RS232 cable x 4 • PRINT cable x1 • IDE cable x 1 • USB cable x 1 (USB port x 2) • VGA cable x 1 • LAN cable x 1 • GPIO cable x 1 • PS/2 Mouse cable x 1 • PS/2 Keyboard cable x 1 • Screw Kit x 1

1.2 Product Description

The VDX-6353RD family of low-power x86 embedded controller is designed to meet PC/104 specification, and integrated with the following features.

- 800 MHz Vortex86DX SoC
- VGA, TFT/ LVDS LCD support up to 1280x1024 resolution
- 256 / 512MB DDR2 system memory
- Enhanced IDE (UltraDMA-100/66/33)
- 10/100Mbps Ethernet
- 2 USB 2.0 (host)
- Up to 4 serial ports
- Parallel port
- 16-bit GPIOs
- Audio (Optional)
- Onboard 4MB SPI Flash
- Meet PC/104 stacking spec.
- 2 watchdog timer
- PWM 16~24 channels
- AMI BIOS
- Single voltage +5V DC
- Support extended operating temperature range of -20°C to +70°C

The VDX-6353RD PC/104 family of embedded controller is designed with backward compatibility in mind, to provide migration path for projects facing end-of-life challenges with their existing x86 based PC/104 controller. The VDX-6353RD family of controller is designed as a plug in replacement, with backward compatibility to support legacy software to help extend existing product life cycle without heavy re-engineering.

VDX-6353RD is suitable for broad range of data-acquisition, Industrial automation, Process control, Automotive controller, AVL, Intelligent Vehicle management devic,Medical device, Human machine interface, Robotics, machinery control And more…application that required small footprint, low-power and low-cost hardware with open industry standard such as PC/104.

1.3 Specifications

Features	VDX-6353RD
CPU	DM&P SoC CPU Vortex86DX- 800MHz Real Time Clock with Lithium Battery Backup
Cache	L1:16K I-Cache, 16K D-Cache, L2 Cache 128KB
BIOS	AMI BIOS
Bus Interface	PC/104 Standard Compliant
System Memory	256 / 512MB DDR2 Onboard
Watchdog Timer	Software programmable from 30.5 us to 512 seconds x2 sets(Watchdog 1 fully compatible with M6117D)
VGA	XGI Volari Z9s Chipset VGA and TFT Flat Panel Interface Support LVDS Flat Panel Interface Support Onboard 32MB VGA Memory Support resolution up to 1280 x 1024,16MB colors
LAN	Integrated 10/100M Ethernet
AUDIO	CM119 USB Audio controller (Optional)
I /O Interface	• Enhanced IDE port (UltraDMA-100/66/33) x1 • RS-232 port x3 • RS-232/422/485 port x1 (RS485: Auto Direction) • Parallel port x1 • USB port x2 (USB 2.0 version) • 16-bit GPIO port x1 • 10/100Mbps Ethernet port x1
Connectors	• 2.00 mm ∅ 44-pin box header for IDE x1 • 2.00 mm ∅ 44-pin box header for LCD x 1 • 2.00 mm ∅ 10-pin box header for VGA x1 • 2.00 mm ∅ 10-pin box header for USB x1 • 2.00 mm ∅ 26-pin box header for Print x1 • 2.00 mm ∅ 20-pin box header for 16-bit GPIO x1 • 2.00 mm ∅ 10-pin box header for RS-232 x4 • 2.00 mm ∅ 16-pin header for LVDS x 1 • 2.00 mm ∅ 8-pin header for Ethernet x 1 • 2.54 mm ∅ 5-pin box header for Keyboard x1 • 2.54 mm ∅ 5-pin header for Mouse x1 • 2.54 mm ∅ 4-pin header for DC-in x1 • 2.54 mm ∅ 3-pin header for RS-485 x1 • 2.54 mm ∅ 2-pin header for Reset x1 • 2.54 mm ∅ 7-pin header for Redundancy x1(Opt) • 2.54 mm ∅ 2-pin header for SYS-Fail-SW- x1(Opt) • 1.25 mm ∅ 6-pin Wafer for JTAG x1 • 1.25 mm ∅ 4-pin Wafer for Line-out/MIC-in x2(Optional) • Type I/II Compact Flash Slot x1

Flash Disk Support	• Onboard 4MB SPI Flash Disk (Driver: A) • 44-pin IDE Flash Disk(EmbedDisk 16MB or above) • Compact Flash Type I/II • 44-pin IDE to Micro SD (Optional)
PWM	16~24 channels
Power Requirement	Single Voltage +5V @ 720mA
Dimension	90 X 96mm (3.54 x 3.77 inches)
Weight	90g
Operating Temperature	-20°C ~ +70°C -40°C ~ +85°C (Optional)

1.4 Board Dimension

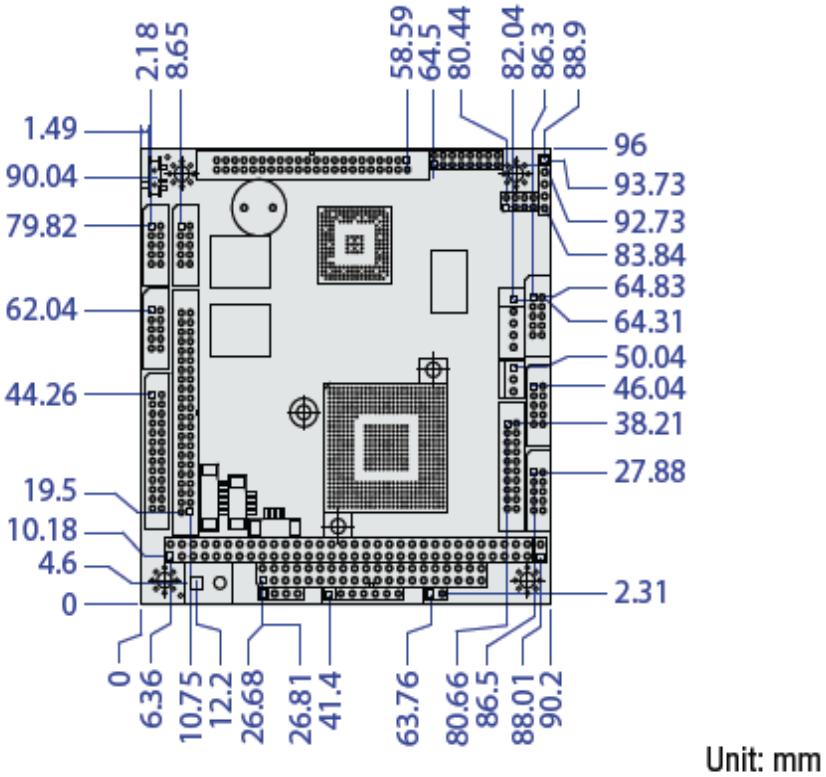

Chapter 2

Installation

2.1 Board Outline

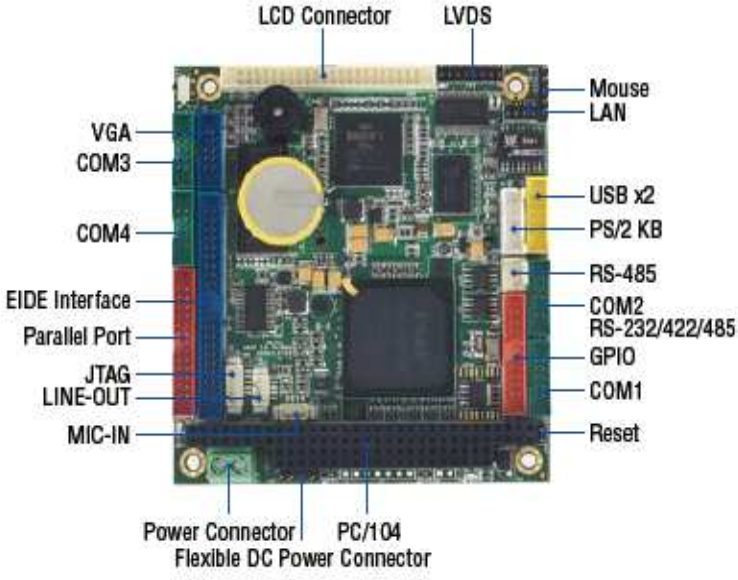

Note:

1. COM2 RS232/422/485 is selected by BIOS setting
2. Audio is optional
3. VDX-6353RD-512 is optional
4. Redundancy Signal and System-Fail-SW are optional

2.2 Connectors & Jumpers Location

Connectors

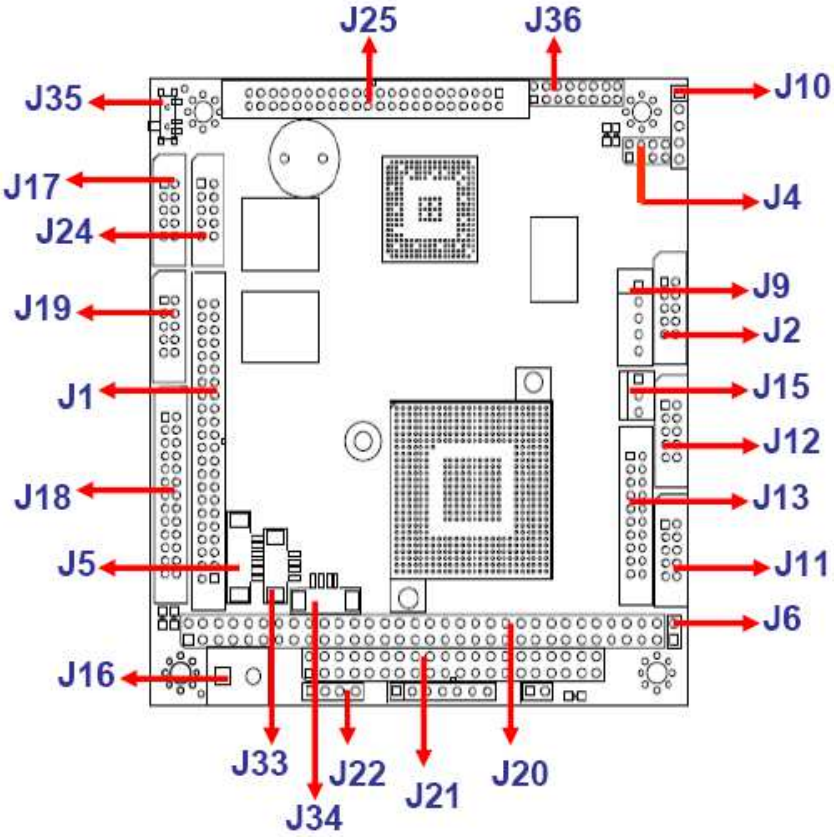

(Note1: J33 and J34 are optional)

Jumpers & LEDs

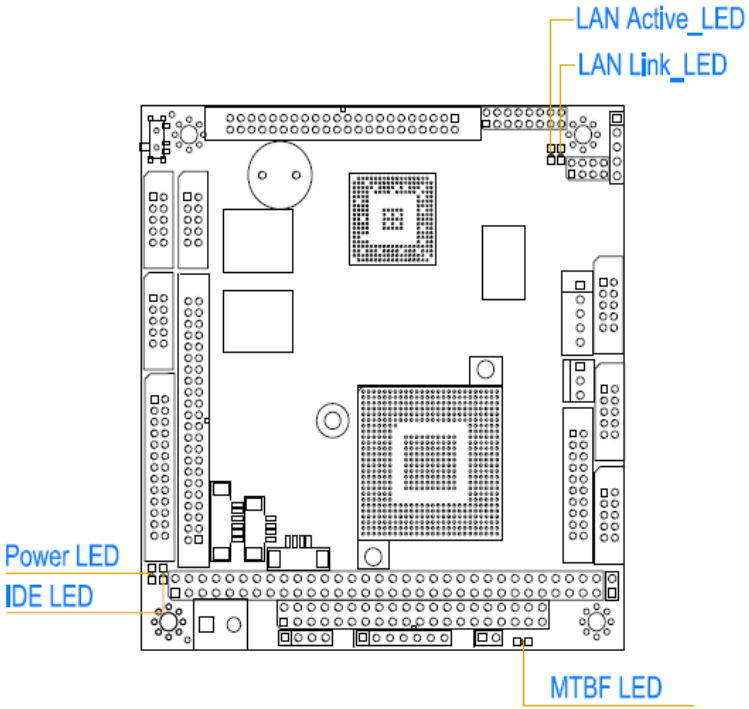

2.3 Connectors & Jumpers Summary

Summary Table

Nbr	Description	Type of Connections	Pin nbrs.
J1	IDE	Box Header, 2.0∅ ,22x2	44-pin
J2	USB	Box Header,2.0∅ , 5x2	10-pin
J4	LAN	Pin Header, 2.0∅ , 4x2	8-pin
J5	JTAG	Wafer, 1.25∅ , 6x1	6-pin
J6	Reset	Pin Header, 2,54∅,1x2	2-pin
J7	Redundancy (Optional)	Pin Header, 2.54∅, 7x1	7-pin
J8	System –Fail-Switch (Optional)	Pin Header, 2.54∅ , 2x1	2-pin
J9	PS/2 Keyboard	Box Header, 2,54∅,1x5	5-pin
J10	PS/2 Mouse	Pin Header, 2,54∅,1x5	5-pin
J11	COM1(TTL/GPIO-P4 / PWMx8)	Box Header, 2.0∅ 5x2	10-pin
J12	**COM2**(RS232/422/485)	Box Header, 2.0∅ 5x2	10-pin
J13	GPIO (Port 0 / 1 /PWMx16)	Box Header, 2.0∅ ,10x2	20-pin
J15	RS-485 (Auto direction)	Molex Header,2.54∅, 3x1	3-pin
J16	Power Connector	Terminal Block 5.0∅,2x1	2-pin
J17	COM3 (Optional :TTL)	Box Header, 2.0∅ 5x2	10-pin
J18	PRINT	Box Header, 2.0∅ , 13x2	26-pin
J19	COM4 (Optional :TTL)	Box Header, 2.0∅ 5x2	10-pin
J20	PC104 Connector – 64 pin	Box Header, 2.54∅ 32x2	64-pin
J21	PC104 Connector – 40 pin	Box Header, 2.54∅ 20x2	40-pin
J22	4P Power Source (Interconnect to PC/104 – **J20**)	Pin Header, 2.54∅ , 4x1	4-pin
J24	VGA	Box Header, 2.0∅ ,5x2	10-pin
J25	LCD Connector	Box Header,2.0∅ ,22x2	44-pin
J33	LINE-OUT (Optional)	Wafer, 1.25∅ , 4x1	4-pin
J34	MIC-IN (Optional)	Wafer, 1.25∅ , 4x1	4-pin
J35	Master/Slave for IDE & CF	Slide Switch	3-pin
J36	LVDS	Pin Header, 2.0∅ 8x2	16-pin
CF1	Compact Flash	Type I/II CF Connector	50-pin
PWR-LED	Power Active LED (Red)	LED-SMD	
IDE-LED	IDE Active LED (Green)	LED-SMD	

MTBF-LED	MTBF-Out (Orange)	LED-SMD	
LED 3	LAN Link/Active LED (Green)	LED-SMD	
LED 4	LAN Duplex LED (Yellow)	LED-SMD	
SP1	BUZZER		

2.4 Pin Assignments & Jumper Settings

J1: IDE (44 Pins)

Pin #	Signal Name	Pin #	Signal Name
1	IDERST	2	GND
3	IDED7	4	IDED8
5	IDED6	6	IDED9
7	IDED5	8	IDED10
9	IDED4	10	IDED11
11	IDED3	12	IDED12
13	IDED2	14	IDED13
15	IDED1	16	IDED14
17	IDED0	18	IDED15
19	GND	20	NC
21	IDEREQ	22	GND
23	IDEIOW	24	GND
25	IDEIOR	26	GND
27	ICHRDY	28	GND
29	IDEACK	30	GND
31	IDEINT	32	NC
33	IDESA1	34	IDECBLID
35	IDESA0	36	IDESA2
37	IDECS-0	38	IDECS1
39	IDELED	40	GND
41	VCC	42	VCC
43	GND	44	NC

J2: USB

Pin #	Signal Name	Pin #	Signal Name
1	VCC	2	VCC
3	LUSBD3-	4	LUSBD2-
5	LUSBD3+	6	LUSBD2+
7	GND	8	GND
9	GGND	10	GGND

J4: LAN

Pin #	Signal Name	Pin #	Signal Name
1	ATX+	2	ATX-
3	ARX+	4	LED0
5	LED0+	6	ARX-
7	LED1+	8	LED1

J5: JTAG

Pin #	Signal Name	Pin #	Signal Name
1	VCC	2	GND
3	TCK	4	TDO
5	TDI	6	TMS

J6: RESET

Pin #	Signal Name	Pin #	Signal Name
1	RST_SW	2	GND

J7: Redundancy (Optional)

Pin #	Signal Name	Pin #	Signal Name
1	GND	2	SYS-FAIL-OUT
3	SYS-FAIL-IN	4	GPCS0
5	SYS-GPCS-IN	6	TXD9\
7	RXD9\		

J8: System-Fail-Switch (Optional)

Pin #	Signal Name
1	SYS-SW-IN
2	GND

J9: PS/2 Keyboard

Pin #	Signal Name	Pin #	Signal Name
1	KBCLK	2	KBDAT
3	NC	4	GND
5	VCC		

J10: PS/2 Mouse

Pin #	Signal Name	Pin #	Signal Name
1	MSCLK	2	MSDATA
3	NC	4	GND
5	VCC		

J11: COM 1 (Optional: TTL/ GPIO-P4 / PWMx8)

Pin #	Signal Name	Pin #	Signal Name
1	DCD1	2	RXD1
3	TXD1	4	DTR1
5	GND	6	DSR1
7	RTS1	8	CTS1
9	RI1	10	NC

J12: COM2 RS232 / 422 / 485 (Optional: TTL)

Pin #	Signal Name	Pin #	Signal Name
1	DCD2/ **422TX-** / RS485-	2	RXD2 / **422TX+** / RS485+
3	TXD2 / **422RX+**	4	DTR2 / **422RX-**
5	GND	6	DSR2
7	RTS2	8	CTS2
9	RI2	10	NC

J13: GPIO (Port 0 / 1/ PWMx16)

Pin #	Signal Name	Pin #	Signal Name
1	GND	2	VCC
3	GP00	4	GP10
5	GP01	6	GP11
7	GP02	8	GP12
9	GP03	10	GP13
11	GP04	12	GP14
13	GP05	14	GP15
15	GP06	16	GP16
17	GP07	18	GP17
19	VCC	20	GND

J15: RS485 (Auto direction)

Pin #	Signal Name
1	RS485＋
2	RS485－
3	GND

J16: Power Connector (Terminal Block 5.0mm)

Pin #	Signal Name
1	+5V
2	GND

J17: COM3 (Optional: TTL)

Pin #	Signal Name	Pin #	Signal Name
1	DCD3	2	RXD3
3	TXD3	4	DTR3
5	GND	6	DSR3
7	RTS3	8	CTS3
9	RI3	10	NC

J18: PRINT

Pin #	Signal Name	Pin #	Signal Name
1	STB-	14	AFD-
2	PD0	15	ERR-
3	PD1	16	INIT-
4	PD2	17	SLIN-
5	PD3	18	GND
6	PD4	19	GND
7	PD5	20	GND
8	PD6	21	GND
9	PD7	22	GND
10	ACK-	23	GND
11	BUSY	24	GND
12	PE	25	GND
13	SLCT	26	NC

J19: COM4 (Optional: TTL)

Pin #	Signal Name	Pin #	Signal Name
1	DCD4	2	RXD4
3	TXD4	4	DTR4
5	GND	6	DSR4
7	RTS4	8	CTS4
9	RI4	10	NC

J20: PC104 Connector – 64pin

Pin #	Signal Name	Pin #	Signal Name
1	IOCHCHK *	2	GND
3	SD7	4	RESETDRV
5	SD6	6	VCC
7	SD5	8	IRQ9
9	SD4	10	-5V
11	SD3	12	DRQ2
13	SD2	14	-12V
15	SD1	16	OWS
17	SD0	18	+12V
19	IOCHRDY	20	GND
21	AEN	22	SMEMW *
23	SA19	24	SMEMR *
25	SA18	26	IOW *
27	SA17	28	IOR *
29	SA16	30	DACK3 *
31	SA15	32	DRQ3
33	SA14	34	DACK1 *
35	SA13	36	DRQ1
37	SA12	38	REFRESH *
39	SA11	40	SYSCLK
41	SA10	42	IRQ7
43	SA9	44	IRQ6
45	SA8	46	IRQ5
47	SA7	48	IRQ4
49	SA6	50	IRQ3
51	SA5	52	DACK2 *
53	SA4	54	TC
55	SA3	56	BALE
57	SA2	58	VCC
59	SA1	60	OSC
61	SA0	62	GND
63	GND	64	GND

J21: PC104 Connector – 40pin

Pin #	Signal Name	Pin #	Signal Name
1	GND	2	GND
3	MEMCS16 *	4	SBHE *
5	IOCS16 *	6	SA23
7	IRQ10	8	SA22
9	IRQ11	10	SA21
11	IRQ12	12	SA20
13	IRQ15	14	SA19
15	IRQ14	16	SA18
17	DACK0 *	18	SA17
19	DRQ0	20	MEMR *
21	DACK5 *	22	MEMW *
23	DRQ5	24	SD8
25	DACK6 *	26	SD9
27	DRQ6	28	SD10
29	DACK7 *	30	SD11
31	DRQ7	32	SD12
33	VCC	34	SD13
35	MASTER *	36	SD14
37	GND	38	SD15
39	GND	40	NC

J22: 4P Power Source (Interconnect to PC/104 – J20)

Pin #	Signal Name
1	-5V
2	-12V
3	+12V
4	GND

J24: VGA

Pin #	Signal Name	Pin #	Signal Name
1	R OUT	2	GND
3	G OUT	4	GND
5	B OUT	6	GND
7	HSYNC	8	GND
9	VSYNCD	10	GND

J25: LCD (DVO) Connector

Pin #	Signal Name	Pin #	Signal Name
1	+3.3V	2	+3.3V
3	LG2	4	LG3
5	LG4	6	LG5
7	NC	8	NC
9	LR0	10	LR1
11	LR2	12	LR3
13	LR4	14	LR5
15	GND	16	NC
17	NC	18	NC
19	NC	20	GND
21	NC	22	NC
23	LB0	24	LB1
25	LB2	26	LB3
27	LB4	28	LB5
29	NC	30	NC
31	LG0	32	LG1
33	GND	34	GND
35	NC	36	LCLK
37	NC	38	LDE
39	NC	40	LHSYNC
41	NC	42	LVSYNC
43	LBACKL	44	LVDDEN

(Please refer to Appendix A, for TFT Flat Panel Data Output)

J33: LINE OUT (Optional)

Pin #	Signal Name
1	LOUTR
2	GND
3	GND
4	LOUTL

J34: MIC-IN (Optional)

Pin #	Signal Name
1	MICVREF
2	GND
3	GND
4	MIC-IN

J36: LVDS

Pin #	Signal Name	Pin #	Signal Name
1	VCC3 (+3.3V)	2	VCC3 (+3.3V)
3	GND	4	GND
5	RxIN0+	6	RxIN0-
7	RxIN1-	8	GND
9	GND	10	RxIN1+
11	RxIN2+	12	RxIN2-
13	CKIN-	14	GND
15	GND	16	CKIN+

2.5 System Mapping

System Mapping

Memory Mapping

Address	Description	Usage
0000:0000-9000:FFFF	System RAM	*
A000:0000-A000:FFFF	EGA/VGA Video Memory	*
B000:0000-B000:7FFF	MDA RAM, Hercules graphics display RAM	*
B000:8000-B000:FFFF	CGA display RAM	*
C000:0000-C000:7FFF	EGA/VGA BIOS ROM	*
C000:8000-C000:FFFF	Boot ROM enable.	*
D000:0000-D700:FFFF	Expansion ROM space.	
D800:0000-DB00:FFFF	SPI FLASH Emulation Floppy A Enable	
DC00:0000-DF00:FFFF	Expansion ROM space.	
E000:0000-E000:FFFF	USB Legacy SCSI ROM space.	*
F000:0000-F000:FFFF	Motherboard BIOS	*

I/O Mapping

I/O Address	Owner	Usage
0000h - 000Fh	DMA 8237-1	*
0010h - 0017h	COM 9	*
0018h - 001Fh	Empty	
0020h - 0021h	PIC 8259-1	*
0022h - 0023h	6117D configuration port	*
0024h - 002Dh	Empty	
002Eh - 002Fh	Forward to LPC BUS	*
0030h - 003Fh	Empty	
0040h - 0043h	Timer counter 8254	*
0044h - 0047h	Empty	
0048h - 004Bh	PWM counter 8254	*
004Ch - 004Dh	Empty	
004Eh - 004Fh	Forward to LPC BUS	*
0050h - 005Fh	Empty	
0060h	Keyboard data port	*
0061h	Port B + NMI control port	*
0062h - 0063h	8051 download 4K address counter	*

0064h	Keyboard status port	*
0065h	WatchDog0 reload counter	*
0066h	8051 download 8bit data port	*
0067h	WatchDog1 reload counter	*
0068h - 006Dh	WatchDog1 control register	*
006Eh - 006Fh	Empty	
0070h - 0071h	CMOS RAM port	*
0072h - 0075h	MTBF counter	*
0076h - 0077h	Empty	
0078h - 007Ch	GPIO port 0,1,2,3,4 default setup	*
007Dh - 007Fh	Empty	
0080h - 008Fh	DMA page register	*
0090h - 0091h	Empty	
0092h	System control register	*
0093h - 0097h	Empty	
0098h - 009Ch	GPIO direction control	*
00A0h - 00A1h	PIC 8259-2	*
00A2h - 00BFh	Empty	
00C0h - 00DFh	DMA 8237-2	*
00E0h - 00FFh	Empty	
0100h - 0101h	GPCS1 default setting address	*
0170h - 0177h	IDE1 (IRQ 15)	
01F0h - 01F7h	IDE0 (IRQ 14)	*
0220h - 0227h	COM8 Forward to LPC BUS	
0228h - 022Fh	COM7 Forward to LPC BUS	
0238h - 023Fh	COM6 Forward to LPC BUS	
0278h - 027Fh	Printer port (IRQ 7, DMA 0)	*
02E8h - 02EFh	COM4 (IRQ 11)	*
02F8h - 02FFh	COM2 (IRQ 3)	*
0338h - 033Fh	COM5 Forward to LPC BUS	
0376h	IDE1 ATAPI device control write only register	*
03E8h - 03Efh	COM3 (IRQ 10)	*
03F0h - 03F7h	Floppy Disk (IRQ 6, DMA 2)	
03F6h	IDE0 ATAPI device control write only register	*
03F8h - 03FFh	COM1 (IRQ 4)	*
0480h - 048Fh	DMA High page register	*
0490h - 0499h	Instruction counter register	*
04D0h - 04D1h	8259 Edge,/ level control register	*
0CF8h - 0CFFh	PCI configuration port	*
D400h - D4FFh	on board LAN	*
FC00h - FC05h	SPI Flash BIOS control register	*
FC08h - FC0Dh	External SPI BUS control register (output pin configurable GPIO3[0-3])	*

IRQ Mapping

IRQ#	Description	Usage
IRQ0	System Timer	*
IRQ1	Keyboard Controller	*
IRQ2	Cascade for IRQ8 - 15	
IRQ3	Serial Port 2	*
IRQ4	Serial Port 1	*
IRQ5	USB	*
IRQ6	Ethernet 10/100M LAN	*
IRQ7	Parallel Port	*
IRQ8	Real Time Clock	*
IRQ9	Serial Port 9	*
IRQ10	Serial Port 3	*
IRQ11	Serial Port 4	*
IRQ12	Mouse	*
IRQ13	Math Coprocessor	*
IRQ14	Hard Disk Controller#1	*
IRQ15	USB	*

DMA Mapping

DMA#	Description	Usage
DMA0		
DMA1		
DMA2	Floppy Disk Controller	
DMA3		
DMA5		
DMA6		
DMA7		

2.6 Watchdog Timer

There are two watchdog timers in Vortex86SX/DX CPU. One is compatible with M6117D watchdog timer and the other is new. The M6117D compatible watchdog timer is called WDT0 and new one is called WDT1.

We also provide DOS, Linux and WinCE example for your reference. For more technical support, please visit: http://www.dmp.com.tw/tech or download the PDF file: http://www.dmp.com.tw/tech/vortex86dx/

2.7 GPIO (General Purpose Input / Output)

40 GPIO pins are provided by the Vortex86SX/DX for general usage in the system. All GPIO pins are independent and can be configured as inputs or outputs, with or without pull-up/pull-down resistors.

We also offer DOS, Linux and WinCE example for your reference. For more technical support, please visit: http://www.dmp.com.tw/tech or download the PDF file: http://www.dmp.com.tw/tech/vortex86dx/

2.8 SPI flash (Serial Peripheral Interface)

As SPI Flash (Serial Peripheral Interface) offers many benefits including: reduced controller pin count, smaller and simpler PCBs, reduced switching noise, less power consumption, and lower system cost

Many of users may consider using a formatted SPI flash to boot for the system or emulate SPI flash as Floppy (A: Driver or B: Driver). Then you must know how to set for this condition in CMOS Setup and boot up under DOS 6.22, X-DOS, DR-DOS and Free DOS.

For more technical support, please visit: http://www.dmp.com.tw/tech or download the PDF file: http://www.dmp.com.tw/tech/vortex86dx/

2.9 PWM (Pulse-width modulation)

Pulse-width modulation (PWM) of a signal or power source involves the modulation of its duty cycle, to either convey information over a communications channel or control the amount of power sent to a load.

The popular applications of pulse width modulation are in speed control of electric motors, volume control of Class D audio amplifiers or brightness control of light sources and many other power electronics applications.

The Vortex86DX SoC integrated 32 channels of PWM interface enabling the Automation, robotic industry to a New Age x86 SoC platform and we also offer the sample code of PWM which will guide the engineer to control the PWM functionality smoothly.

For more inquire of this sample code that please contact our sales team or mail to:
info@icop.com.tw

3.0 IDE to SD (Micro-SD)

Vortex86DX SoC also built-in simulation circuit to adapt SD to IDE in order to allow your system to recognize Micro-SD card as C: or D: Driver

SD-1917: 44 pins IDE to SD Adapter is an ideal solution for industrial PC or embedded system and 44 pins IDE to SD Adapter can be easily installed on all Vortex86DX-63xx CPU boards. You or your customers just do the BIOS setting and use SD-1917 to connect IDE connector of Vortex86DX-63xx directly.

For further inquiries of SD-1917, please contact ICOP sales team or mail to: info@icop.com.tw for your request.

<BIOS setting>

- Get into the BIOS setup Utility
- Choose Primary IDE Pin Select: SD card
- Press **"F10"** to Save configuration changes and exit setup

SD-1917

SD-1917: http://www.icop.com.tw/pddetail.aspx?id=125&pid=4

Chapter 3

Driver Installation

VGA
The Vortex86DX processor also use external Display chip ""Volari™ Z9s" which is an ultra low powered graphics chipset with total power consumption at around 1-1.5 W. It is capable in providing VGA display output upto 1600x1200. With DVO interface, developers could easily connect flat Panel to support TFT and LVDS output.

LAN
The Vortex86DX processor also integrated 10/100Mbps Ethernet controller that supports both 10/100BASE-T and allows direct connection to your 10/100Mbps Ethernet based Local Area Network for full interaction with local servers, wide area networks such as the Internet.

The controller supports: Half / Full-Duplex Ethernet function to double channel bandwidth, auto media detection.

AUDIO (Optional)
CM119 is a highly integrated single chip USB audio controller specifically for VoIP (Voice over internet protocol) application. All essential analog modules are embedded in CM119, including dual DAC and earphone driver, ADC, microphone booster, PLL, regulator, and USB transceiver. 8 GPIO pins can constitute a 24 key matrix directly support keypad control function without MCU.

Many features are programmable with jumper pins or external EEPROM. Vender can customize unique USB VID/PID to EEPROM for VoIP software authentication. Moreover, individual unique phone number for each device is possible via serial number stored in external EEPROM.

Operating system support
The Vortex86DX-6353RD PC/104 CPU board supports Embedded software: Free DOS, DOS 6.22, PCDOS 7.1, DR-DOS,x-DOS,OS/2,Windows CE 6.0, Windows 98, Windows XP Professional, Windows Embedded standard (XPE) and Windows 2000 (SP4).

Please get the drivers from the Driver CD which attached with the standard packing of Vortex86DX-6353RD board or please get it from DMP official website:
http://www.dmp.com.tw/tech/vortex86dx/

Vortex86DX-6353RD also supports most of the popular Linux distributions, for more detail information, please visit DMP official website: http://www.dmp.com.tw/tech/vortex86dx/

Appendix

A. TFT Flat Panel Data Output

Vortex86 SX/DX Pin Name		TFT LCD 18 / 24 Bits
1	VCC3 (3.3V)	VDD
2	VCC3 (3.3V)	VDD
3	LG2	G2
4	LG3	G3
5	LG4	G4
6	LG5	G5
7	NC	/
8	NC	/
9	LR0	R0
10	LR1	R1
11	LR2	R2
12	LR3	R3
13	LR4	R4
14	LR5	R5
15	GND	VSS
16	NC	/
17	NC	/
18	NC	/
19	NC	/
20	GND	VSS
21	NC	/
22	NC	/
23	LB0	B0
24	LB1	B1
25	LB2	B2
26	LB3	B3
27	LB4	B4
28	LB5	B5
29	NC	/
30	NC	/
31	LG0	G0
32	LG1	G1
33	GND	VSS
34	GND	VSS
35	NC	/
36	LCLK	XCLK
37	NC	/
38	LDE	DEN
39	NC	/
40	LHSYNC	HSYNC
41	NC	/
42	LVSYNC	VSYNC
43	LBACKL	/
44	LVDDEN	VDDEN

B. TFT Flat Panel Support List

Size	Brand	Resolution	Model No.
5.7”	Data image	320x240	FG050701DSSWBG01
5.7”	Optrex	320x240	55264GD057J-FW-ABN
5.7”	TOSHIBA	320x240	LTA057A343F
5.7”	Sharp	320x240 (QVGA / VGA)	LQ057Q3DC02
5.7”	Kyocera	320x240 (QVGA / VGA)	TCG057QV1AC-G10
5.7”	PVI	320x240 (QVGA / VGA)	PD057VU4 /U5
5.7”	Data image	640x480	FG050710DSSWJG01/DG01
5.7”	Ampire	640x480	AM-640480GTMQW-T00H
5.7”	URT	640x480	UMSH-8004MD-T
5.7”	Sharp	640x480	LQ057V3DG01
5.7”	CPT	640x480	CLAA057VA01
6.4”	PVI	640x480	V16C6448AC
6.4”	LG-PHILIPS	640x480	LB064V02
6.4”	PVI	640x480	PD064VT2 /VT4 /VT5
6.4”	Sharp	640x480	LQ064V3DG01
7”	AUO	800x480	C070VW02V0
7”	Data image	800x480	FG0700A0DSSWBG01
7”	LG-PHILIPS	800x480 (TFT 24 bits)	LB070WV1
7”	HITACHI	800x480	TX18D57VM2BAA
7”	Samsung	800x480	LMS700KF05
7”	PVI	800x480	PM070WL4
7”	URT	800x480	UMSH-8173MD-1T
7”	CHI HSIN	800x480	LW700AT9309
7”	Microtips	800x480	MTF-T070ACSLP-LB

Size	Brand	Resolution	Model No.
8”	Sharp	640x480	LQ080V3DG01
8”	AUO	800x600 (TFT 24bits)	A080SN01 V0
8”	Ampire	800x600	AM-800600C3TMQW-G0H
8”	Innolux	800x600 (TFT 24bits)	AT080TN52
8”	CHI HSIN	800x600 (TFT / LVDS)	LS080HT111
8.4”	Sharp	800x600	LQ084S3DG01
10.4”	Ampire	800x600	AM-800600LTNQW-B0H
10.4”	PVI	640x480	PD104VT1 / VT2
10.4”	NEC	640x480	NL6448AC33-18
10.4”	NEC	640x480	NL6448AC33-29
10.4”	NEC	640x480	NL6448BC33-53
10.4”	NEC	640x480	NL6448BC33-59
10.4”	Sharp	640x480	LQ104V1DG21
10.4”	Sharp	640x480	LQ104V1DG51/DG61
10.4”	Sharp	640x480	LQ10d368
11”	Sharp	800x480	LQ110Y3DG01
12.1”	NEC	800x600	NL8060BC31-01

C. LVDS Flat Panel Support

Size	Brand	Resolution	Model No.
3.5”	PVI	640x480	PD035VL1
5”	PVI	640x480	PD050VL1
6.5”	AUO	640x480	G065VN01
7”	Ampire	800x480	AM-800480R3TMQW-A1H
8”	Ampire	800x480	AM-800480KTMQW-A1H
8.4”	AUO	800x600	G084SN03
8.4”	Ampire	800x600	AM-800600MTMQW-A1H
8.9”	AUO	1024x600	A089SW01
8.9”	Ampire	1024x600	AM-1024600CTMQW-00
8.9”	CPT	1024x600	CLAA089NA0ACW
8.9”	HannStar	1024x600	HSD089IFW1
9”	Ampire	800x480	AM-800480QTMQW-00H
10”	HannStar	1024x600	HSD100IFW1-A00
10”	Ampire	1024x600	AM-1024600BTMQW-00H
10.4”	Ampire	800x600	AM-800600LTNQW-A0/D0/00H
10.4”	MITSUBISHI	800x600	AA104SG01
10.4”	AUO	800x600	G104SN02
10.4”	Sharp	800x600	LQ104S1LG61
10.4”	CHI MEI	1024x768	G104X1-L01/L03
10.4”	Ampire	1024x768	AM-1024768CTMQW-T00
12.1”	MITSUBISHI	800x600	AA121SL03
12.1”	AUO	800x600	G121SN01
12.1”	Ampire	1024x768	AM-1024768GTMQW-00H
15”	AUO	1024x768	G150XG01

D. Flat Panel Wiring and Lighting

■ Hardware

Before you connect the TFT LCD Flat Panel with Vortex86DX-6353RD, please make sure that the input Voltage of LCD is +3.3V or Not

■ BIOS

Please contact or e-mail our regional sales to get the special BIOS for the any TFT LCD Flat Panels.

■ Wiring LCD Cable

Please refer to Page 18, 19 (J25: LCD & J26: LVDS connector) and Page29~33. Or for more LCD lighting and integration service, please contact our regional sales or mail to info@icop.com.tw ,if you have any questions.

E. TCP/IP library for DOS real mode

DSock is a TCP/IP library for DOS real mode, which is used by RSIP. It provides simple C functions for programmer to write Internet applications. ICOP also provide Internet examples using DSock: BOOTP/DHCP, FTP server, SMTP client/server, HTTP server, TELNET server, Talk client/server, etc.

DSock provides a lot of example source code. Programmer can add Internet functions to their project easily and save development time. With a utility "MakeROM", programmer also can make a ROM image to fit their application, those examples can be seen in the following Application systems: Mity-Mite Serial Server, Web Camera Tiny Server and RSIP Serial Server.

DSock is free for All ICOP products using M6117D/Vortex86/Vortex86SX/Vortex86DX CPU and ICOP also provide the business version of DSock for those customers who are using other x86 CPUs.
If you would like to use DSock or business version of DSock, Please mail to info@icop.com.tw or contact your regional sales.

Please download the trial DSock software and Utilities from our website:
http://www.dmp.com.tw/tech/dmp-lib/dsock/

F. BIOS Default setting

If the system cannot be booted after BIOS changes are made, Please follow below procedures in order to restore the CMOS as default setting.

- Press **"End"** Key, when the power on

- Press **<Del>** to enter the AMI BIOS setup
- Press **"F9"** to Load Optimized Defaults
- Press **"F10"** to Save configuration changes and exit setup

Warranty

This product is warranted to be in good working order for a period of one year from the date of purchase. Should this product fail to be in good working order at any time during this period, we will, at our option, replace or repair it at no additional charge except as set forth in the following terms. This warranty does not apply to products damaged by misuse, modifications, accident or disaster. Vendor assumes no liability for any damages, lost profits, lost savings or any other incidental or consequential damage resulting from the use, misuse of, originality to use this product. Vendor will not be liable for any claim made by any other related party. Return authorization must be obtained from the vendor before returned merchandise will be accepted. Authorization can be obtained by calling or faxing the vendor and requesting a Return Merchandise Authorization (RMA) number. Returned goods should always be accompanied by a clear problem description.