RSB-3730

NXP i.MX8M Mini Cortex-A53 2.5" SBC with UIO40-Express

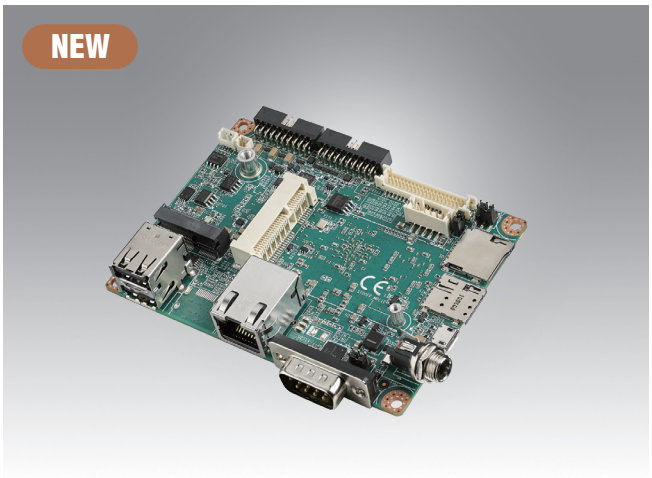

Features

- NXP i.MX8M Mini Cortex-A53 Quad core up to 1.8GHZ
- Onboard LPDDR4 2/4 GB
- 1 HDMI or 1 Dual Channel 24 bit LVDS or 1 MIPI DSI by bom option
- Up to 5 USB2.0, 1 USB OTG, 2 RS232, 1 RS232/485, 8 GPIO, 1 I2C
- 1 GbE, 1 Mini-PCIE , 1 M.2
- Supports Yocto
- Support I/O Expansions by UIO40-Express I/O boards, please refer to page #3 for more information

Introduction

RSB-3730 is a RISC 2.5" single board computer (SBC) powered by aNXP i.MX8M Mini Cortex-A53 Quad high performance processor. It offers both rich display as HDMI/LVDS/DSI and rich IO as 1 GbE/3 serials/5 USB/8GPIOs. RSB-3730 also features Mini-PCIe for LTE and M.2 for WiFi/BT solution. It is an ideal solution for healthcare, security, IOT gateway and Vending machine application.

Specifications

Form Factor		2.5" SBC with UIO40-Express for I/O Expansions
Processor System	CPU	NXP i.MX8M Mini Cortex-A53 Quad core up to 1.8GHz
Memory	Technology	LPDDR4 1333MHz
	Capacity	On-board 2/4 GB
	Flash	16GB/32GB/64GB of eMMC NAND Flash for OS and Advantech's boot loader
NPU	NPU	-
Graphics	HDMI	1 HDMI 2.0 (Default)
	LVDS	1 Dual Channel 18/24 Bit LVDS, Backlight power, 5/12V, Max. 1A (shared with HDMI, default as HDMI)
	MIPI DSI	1 MIPI-DSI (shared with HDMI, default as HDMI)
	Graphics Engine	Vivante GC320, GC NanoUltra 3D GPU Support OpenGL ES 2.0, VG 1.1
	H/W Video Codec	Decoder: 1080p60 H265, VP9;1080p60 H264, VP8 Encoder: 1080p60 H.264, VP8
Ethernet	Chipset	RTL8211FS
	Speed	1 10/100/1000 Mbps
WatchDog Timer	WatchDog Timer	Yes
I/O	USB	2 x USB2.0 by typeA, 1 x USB OTG
	Audio	1 Mic. in / Line out by pin header (option)
	CAN	-
	Serial Port	1 x RS232 by pin header for debug 1 x RS232/485 by DB9
	Camera Input	-
	UIO40-Express	3 USB2.0, upto 2 RS232, 1 I2C, 12 GPIOs
Indicator	LED	1 Power LED
Expansion	Mini PCIe	1 Full Size Mini PCIe Slot (with USB only)
	M.2	1 E-Key 2230, w/ SDIO&PCIE&USB& UART (option)
	SD Socket	1 Micro SD Socket
	SIM Slot	1 Nano SIM Slot
Power	Power Supply Voltage	+12 V
	Power Type	Lockable DC-Jack (2pin type connector by BOM option)
	Power Consumption	9.96W @burning
Environment	Operating Temperature	0 ~ 60 °C / -40 ~ 85 °C
	Operating Humidity	5%~95% Relative humidity, non-condensing
Mechanical	Dimensions	100 x 72 x 19 mm
	Weight	0.05kg
Operation System		Yocto
Certifications		CE/FCC Class B

All product specifications are subject to change without notice.

Last updated: 16-Aug-2023

Block Diagram

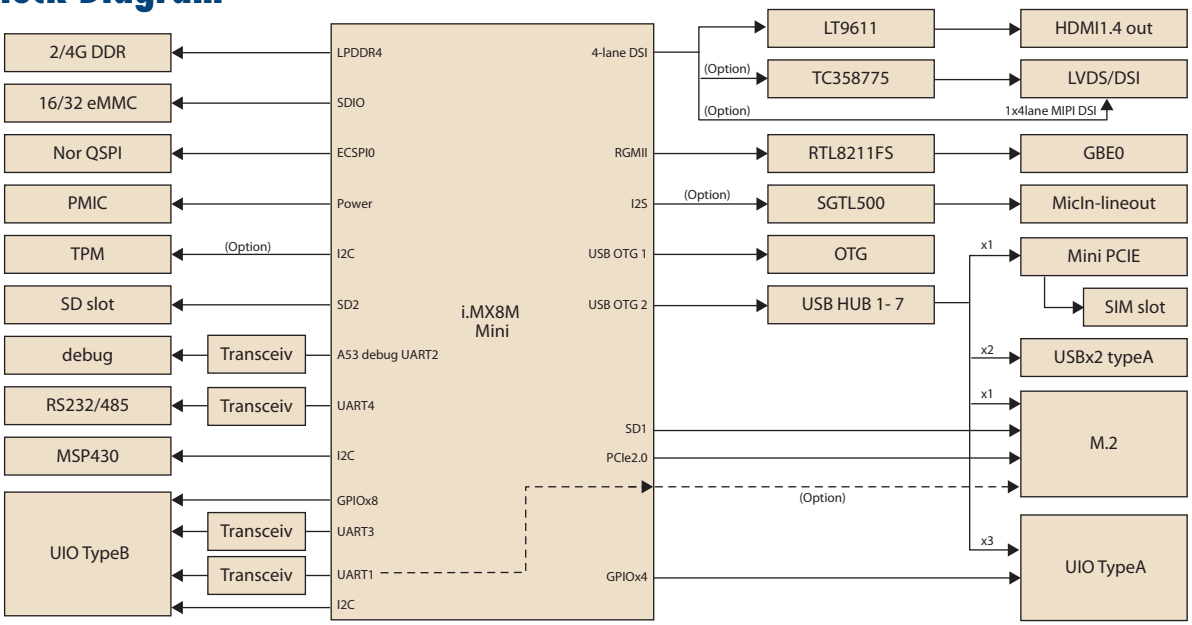

Ordering Information

Part No.	CPU	Memory	Emmc	Disaply	UART1	Series port	USB Host	USB OTG	SD	Operating Temperature
RSB-3730CQ-XDA1E	iMX8M Mini Quad 1.8GHz	2	16	LVDS	to UIO	1 x RS232/485 by DB9 2 x RS232 by UIO	2 by TypeA 3 by UIO CONN	1	1	0 ~ 60 °C
RSB-3730WQ-XDA1E	iMX8M Mini Quad 1.8GHz	2	16	LVDS	to UIO	1 x RS232/485 by DB9 2 x RS232 by UIO	2 by TypeA 3 by UIO CONN	1	1	-40 ~ 85 °C
RSB-3730CQ-XHA1E	iMX8M Mini Quad 1.8GHz	4	32	HDMI	to M.2	1 x RS232/485 by DB9 1 x RS232 by UIO	2 by TypeA 3 by UIO CONN	1	1	0 ~ 60 °C
RSB-3730CQ-XNA1E	iMX8M Mini Quad 1.8GHz	2	16	DSI	to UIO	1 x RS232/485 by DB9 2 x RS232 by UIO	2 by TypeA 3 by UIO CONN	1	1	0 ~ 60 °C

Packing List

Part Number	Description
RSB-3730	RSB-3730 2.5" SBC with heatsink

Optional Accessories

Part Number	Description
96PSA-A36W12R1-3	ADP A/D 100-240V 36W 12V C6 DC PLUG 90° 62368
1700032388-01	Line out cable
1700032387-01	Mic. in cable
1702002605	Power Cord 3P EU 10A 250V 183cm
1700008921	Power Cord 3P PSE 183cm
1702031801	Power Cord 3P UK 10A 250V 183cm
1702002600	Power Cord UL 3P 10A 125V 183cm
1700009652	Power Cord CCC 3P 10A 250V 187cm
EWM-W194M201E	802.11ac + BT 5.0 2T2R NXP88W8997 SDIO/UART
AIW-154BN	802.11ac+BT5.0 NXP 88W8997 PCIe+UART
968AD00479*	EC20CEFRG-MINIPCIE R2.1 LTE Cat 4

* Please contact us to get suitable celluar module for your region.

Dimensions

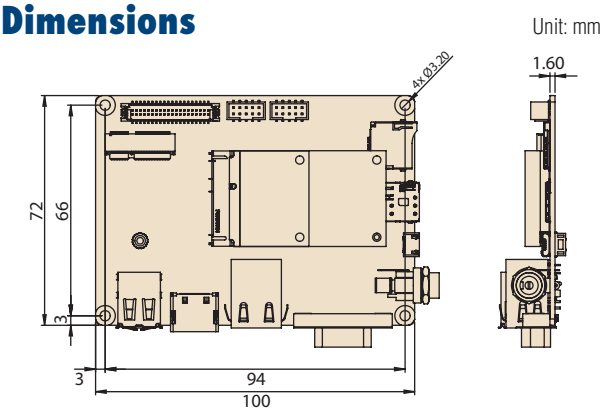

Front I/O on RSB-3730

Compatible I/O Expansion Boards

UIO-4030

1 x RS-485
1 x RS-232
1 x 4 DIs & 4 DOs

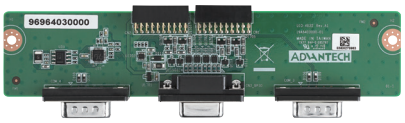

Specifications

General	
USB	–
RS-232	1 x 2 wires RS-232
RS-485	1 x RS-485
GPIO	4 DIs, 4 DOs (2.5~24V)
CAN Bus	–
GbE	–
Dimension	146 x 31 x 22 mm
Environment	
Weight	180g
Operating Humidity	5 ~ 95% relative humidity, non-condensing
Operating Temperature	-40 ~ 85 °C
Storage Temperature	-40 ~ 85 °C and 60 °C @ 95% RH Non-Condensing

Ordering Information

P/N	Description
UIO-4030	UIO-4030, 1 RS232, 4 DIs, 4 DOs, 1 RS-485

UIO-4032

1 x GbE
2 x USB2.0
2 x RS-232

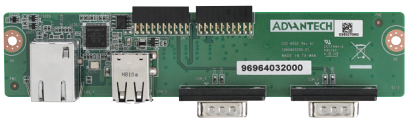

Specifications

General	
USB	2 x USB 2.0
RS-232	2 x 2 wires RS-232
RS-485	–
GPIO	–
CAN Bus	–
GbE	1 x GbE
Dimension	146 x 31 x 22 mm
Environment	
Weight	200g
Operating Humidity	5 ~ 95% relative humidity, non-condensing
Operating Temperature	-40 ~ 85 °C
Storage Temperature	-40 ~ 85 °C and 60 °C @ 95% RH Non-Condensing

Ordering Information

P/N	Description
UIO-4032	UIO-4032, 1 GbE, 2 USB, 2 RS-232

UIO-4034

1 x CAN bus
2 x RS-232

Specifications

General	
USB	–
RS-232	2 x 2 wires RS-232
RS-485	–
GPIO	–
CAN Bus	1 x CAN bus 2.0B, 1 Mbps
GbE	–
Dimension	146 x 31 x 22 mm
Environment	
Weight	180g
Operating Humidity	5 ~ 95% relative humidity, non-condensing
Operating Temperature	-40 ~ 85 °C
Storage Temperature	-40 ~ 85 °C and 60 °C @ 95% RH Non-Condensing

Ordering Information

P/N	Description
UIO-4034	UIO-4034, 1 CAN, 2 RS-232

Compatible Main Boards

Part No.	Description
RSB-3430XD-PXA1E*	RSB-3430 NXP i.MX6 Series 2.5" UIO Main Board
RSB-3720XX-XCA1E*	RSB-3720 NXP i.MX8M Plus Series 2.5" UIO Main Board
RSB-3710XX-XXA1E*	RSB-3710 Rockchip RK3399 Series 2.5" UIO Main Board
RSB-3730xx-xxA1E*	RSB-3730 NXP i.MX8M Mini series 2.5'' UIO Main Board

*X indicates different configurations, please refer to each main board's datasheet for complete P/N to order.

UIO-4036

4 x GbE

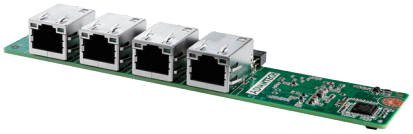

Specifications

General	
USB	–
RS-232	–
RS-485	–
GPIO	–
CAN Bus	–
GbE	4 x GbE
Dimension	146 x 31 x 20 mm
Environment	
Weight	200g
Operating Humidity	5 ~ 95% relative humidity, non-condensing
Operating Temperature	-40 ~ 85 °C
Storage Temperature	-40 ~ 85 °C and 60 °C @ 95% RH Non-Condensing

Ordering Information

P/N	Description
UIO-4036	UIO-4036, 4 GbE

Compatible Main Boards

Part No.	Description
RSB-3430XD-PXA1E*	RSB-3430 NXP i.MX6 Series 2.5" UIO Main Board
RSB-3720XX-XCA1E*	RSB-3720 NXP i.MX8M Plus Series 2.5" UIO Main Board
RSB-3710XX-XXA1E*	RSB-3710 Rockchip RK3399 Series 2.5" UIO Main Board
RSB-3730xx-xxA1E*	RSB-3730 NXP i.MX8M Mini series 2.5'' UIO Main Board

*X indicates different configurations, please refer to each main board's datasheet for complete P/N to order.