Our Products Make Your Product Better®

To learn more about EMAC's products and services and how they can help your project

http://ftp.emacinc.com/Tech_Info/About_EMAC_Products_and_Services.pdf

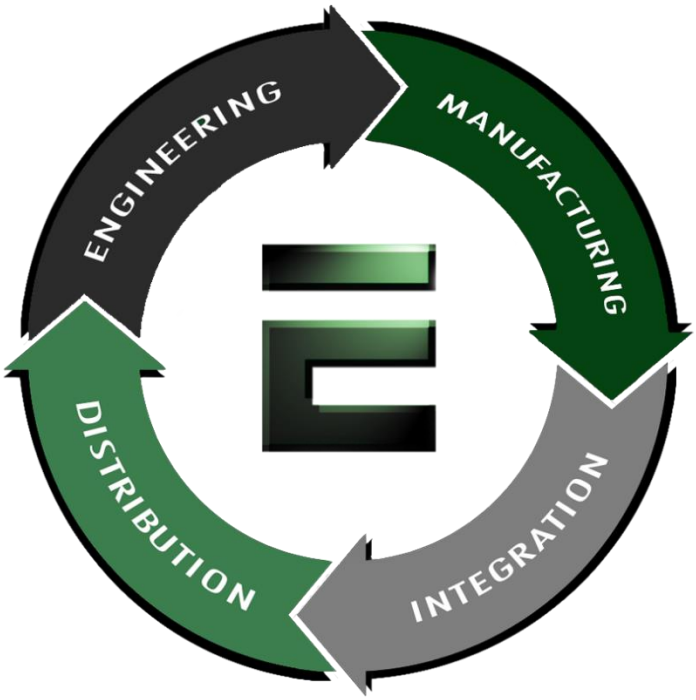

Authorized Distributor, Integrator, and Value-Added Reseller

Manual downloaded from ftp.emacinc.com

For purchase information please contact info@emacinc.com

For technical support please submit a ticket at www.emacinc.com/support

User Manual

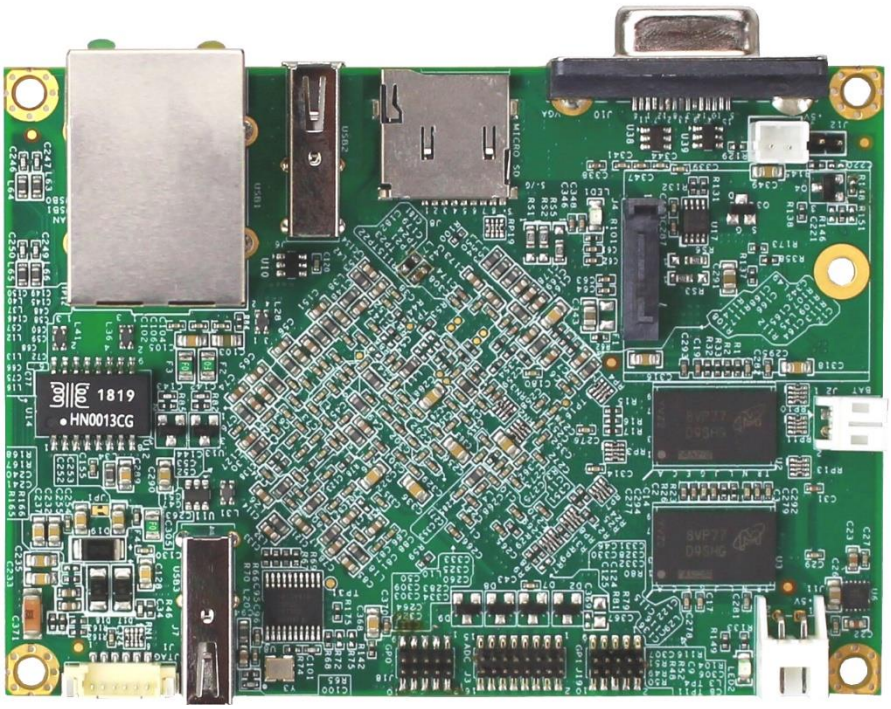

VDX3-PITX

with

DM&P Vortex86DX3
1GHz processor

Version 1.0

Copyright

The information in this manual is subject to change without notice for continues improvement in the product. All rights are reserved. The manufacturer assumes no reasonability for any inaccuracies that may be contained in this document and makes no commitment to update or to keep current the information contained in this manual.

No part of this manual may be reproduced, copied, translated or transmitted, in whole or in part, in any form or by any means without the prior to written permission of ICOP Technology Inc.

Copyright © 2018 ICOP Technology Inc

Trademarks Acknowledgement

Vortex86DX3™ is the registered trademark of DM&P Electronics Inc. Other brand names and product names that appear in this document are the properties and registered trademarks of their respective owners. All names mentioned herewith are served for identification purpose only.

Revision History

Revision	Date	Remark
1.0	July 10, 2018	First version release

Contents

1 General Information 1

1.1 Overview 1

1.2 Block Diagram 1

1.3 Specifications 2

1.4 Ordering Information 3

1.4.1 VDX3-PITX 3

1.4.2 SATA DOM 3

2 Hardware Information 4

2.1 Dimension 4

2.2 Board Outline and Jumper Location 5

2.3 Connector and Jumper Summary 6

2.4 Pin Assignments & Jumper Settings 7

J2: Battery Connector 7

J3: ADC 7

J4: SATA DOM Connector 7

J5: DC 5V Output 7

J11: Power Input 7

J12: Reset Jumper 7

J15: Line-out 7

J17: MIC-in 8

J18: GPIO 0 8

J19: GPIO 1 8

3 Software Resources 9

3.1 ICOP Technical Resource Website 9

Technical Support Directly from ICOP 10

User Manual Feedback 10

Warranty 11

1 General Information

1.1 Overview

Come with PICO-ITX form factor, VDX3-PITX is designed for applications with size limitation requirement. VDX3-PITX, featured on Vortex86DX3 1GHz SoC, supports 2GB DDR3 RAM, LAN, SATA DOM, Micro SD, 4x USB, 2x 8-bit GPIO, 8x 11-bit ADC, and Audio.

Powered by 5V DC input, VDX3-PITX supports operation environment temperature from -10°C ~ +60°C and -20°C ~ +70°C. Ethernet-based fieldbus system for smart control EtherCAT is also supported on VDX3-PITX, which allows users to handle machine to machine communication by using RJ45 LAN cable.

1.2 Block Diagram

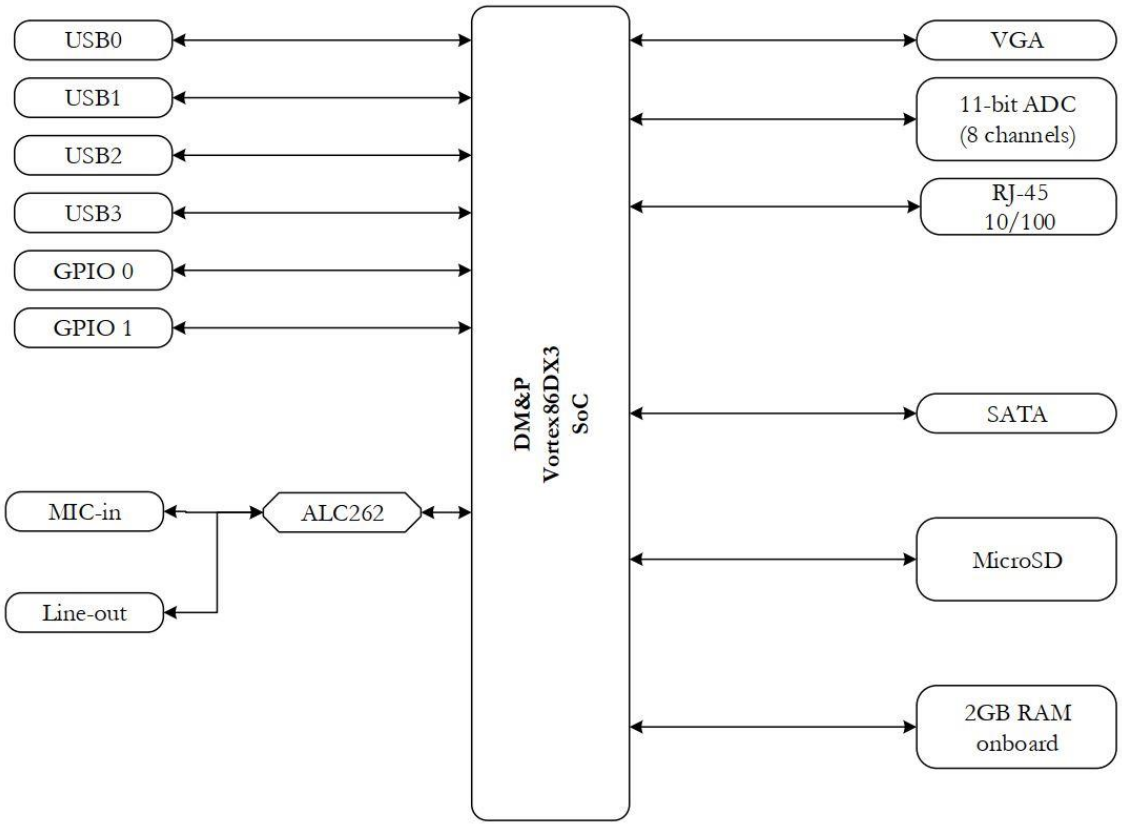

1.3 Specifications

CPU	DM&P SoC CPU Vortex86DX3 - 1GHz L1:32K I-Cache, 32K D-Cache, L2 Cache:512KB	
RAM	2GB DDR3 Onboard	
BIOS	AMI BIOS	
Display	Integrated 2D VGA chip VGA: Maximum resolution up to 1920x1080 @ 60Hz	
LAN	Integrated 10/100Mbps Ethernet x1	
I/O Interface	USB (ver. 2.0) x4 11-bit ADC x8	8-bit GPIO x2 Audio
Connectors	2.0mm 8-pin header for 8-bit GPIO x2 2.0mm 16-pin header for ADC x1 2.0mm 2-pin wafer for DC input x1 2.0mm 2-pin wafer for Battery x1 2-pin box header for DC 5V output x1 1.25mm 4-pin wafer for Line-out/MIC-in x2 7-pin SATA connector for SATA DOM x1 9-pin D-Sub female connector for VGA x1 USB connector x4 RJ45 connector x1 Micro SD slot x1	
Power Requirement	DC +5V @ 1150mA	
Operating Temp.	-20°C ~ +70°C (Single Core) -10°C ~ +60°C (Dual Corel)	
O/S Support	Windows 7 Windows Embedded Standard 7 Windows Embedded Compact 7 Windows Embedded CE6.0 Windows XP Professional Windows Embedded 2009	Linux DOS POS Ready (WePOS) QNX VxWorks Free BSD
Dimensions	100mm x 72mm	
Weight	70g	

1.4 Ordering Information

1.4.1 VDX3-PITX

Part Number	Description
VDX3-PITX-7S5E1	Vortex86DX3 1GHz with onboard 2GB RAM and SATA/LAN/4USB/16-bit GPIO/8ch 11-bit ADC/Audio

1.4.2 SATA DOM

Product Name	MLC	SLC	0˚C ~ +70˚C	-40˚C ~ +85˚C
SDM-SST-2G-H-M	V		V	
SDM-SST-4G-H-M	V		V	
ISATA-8G-H-M	V		V	
ISATA-16G-H-M	V		V	
ISATA-32G-H-M	V		V	
ISATA-4G-H-M-X	V			V
ISATA-8G-H-M-X	V			V
ISATA-16G-H-M-X	V			V
ISATA-32G-H-M-X	V			V
ISATA-1G-H-S		V	V	
ISATA-2G-H-S		V	V	
ISATA-4G-H-S		V	V	
ISATA-8G-H-S		V	V	
ISATA-16G-H-S		V	V	
SDM-SST-2G-H-S-X		V		V
SDM-SST-4G-H-S-X		V		V
SDM-SST-8G-H-S-X		V		V
ISATA-16G-H-S-X		V		V

2 Hardware Information

2.1 Dimension

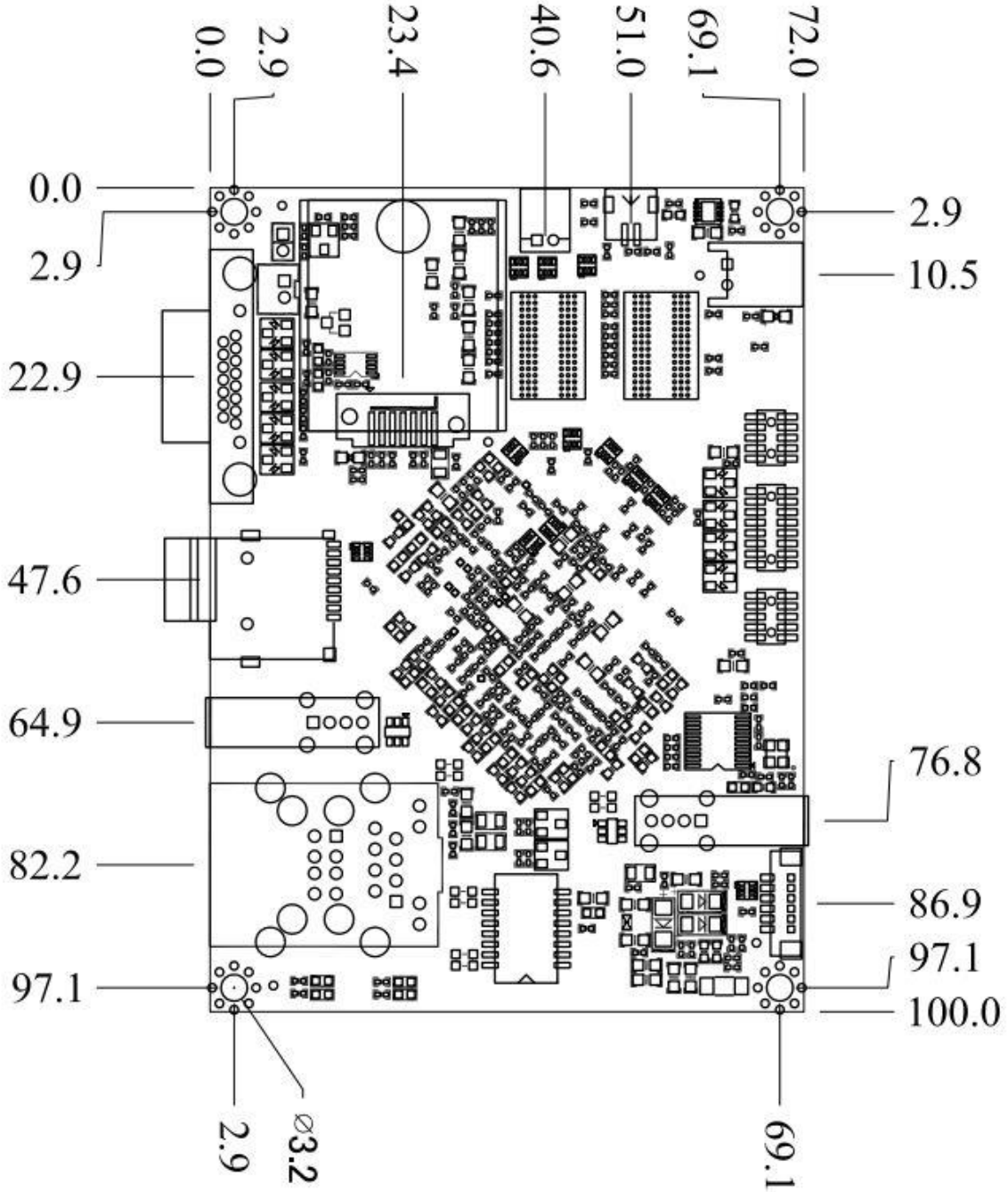

2.2 Board Outline and Jumper Location

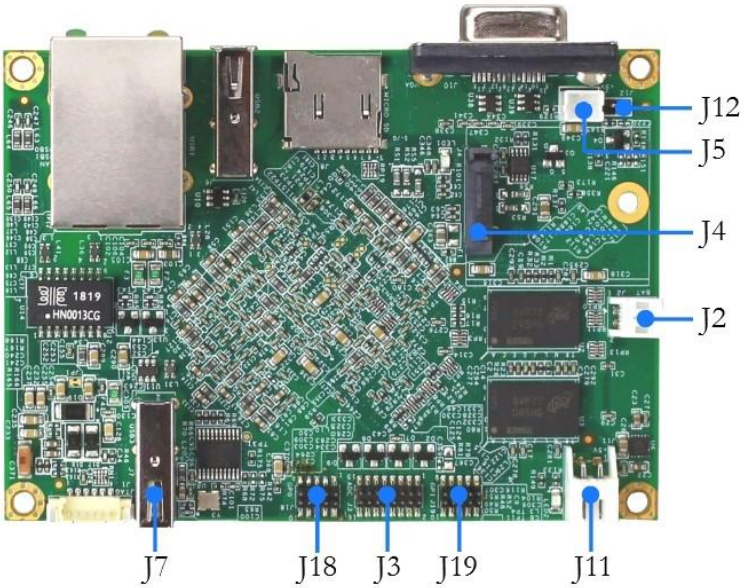

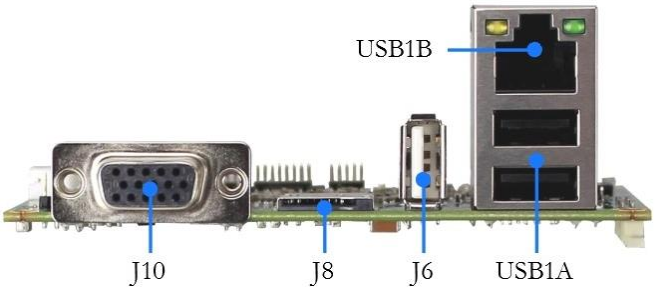

2.3 Connector and Jumper Summary

Nbr.	Name	Type of Connector	Nbr of Pin
J2	Battery Connector	Wafer, 2.0mm, 1x2	2
J3	ADC	Pin Header, 1.27mm, 2x8	16
J4	SATA DOM Connector	SATA 7P Connector, 1x7	
J5	DC 5V Output	Box Header, 2.0mm, 1x2	2
J6	USB2	Type A USB Connector	
J7	USB3	Type A USB Connector	
J8	Micro SD Slot	Standard Micro SD Slot	
J10	VGA	15-pin D-Sub Connector	
J11	Power Input	Wafer, 2.5mm, 1x2	2
J12	Reset Jumper	Pin Header, 2.0mm, 1x2	2
J15	Line-out	Wafer, 1.25mm, 1x4	4
J17	MIC-in	Wafer, 1.25mm, 1x4	4
J18	GPIO 0	Pin Header, 1.27mm, 2x5	10
J19	GPIO 1	Pin Header, 1.27mm, 2x5	10
USB1A	USB0	Type A USB Connector	
	USB1	Type A USB Connector	
USB1B	LAN	RJ45 Connector	

2.4 Pin Assignments & Jumper Settings

J2: Battery Connector

Pin#	Signal Name
1.	VBATT
2	GND

J3: ADC

Pin#	Signal Name	Pin#	Signal Name
1.	ADC_0	2	GND
3	ADC_1	4	GND
5	ADC_2	6	GND
7	ADC_3	8	GND
9	ADC_4	10	GND
11	ADC_5	12	GND
13	ADC_6	14	GND
15	ADC_7	16	GND

J4: SATA DOM Connector

Pin#	Signal Name
1.	GND
2	SATATX+
3	SATATX-
4	GND
5	SATARX-
6	SATATX+
7	GND

J5: DC 5V Output

Pin#	Signal Name
1.	VCC
2	GND

J11: Power Input

Pin#	Signal Name
1.	DC +5V
2	GND

J12: Reset Jumper

Pin#	Signal Name
1.	Reset
2	GND

J15: Line-out

Pin#	Signal Name
1.	LOUT_R
2	GND
3	LOUT_L
4	GND

J17: MIC-in

Pin#	Signal Name
1.	MIC_IN_R
2	GND
3	MIC_IN_L
4	GND

J18: GPIO 0

Pin#	Signal Name	Pin#	Signal Name
1.	GP00	2	GP01
3	GP02	4	GP03
5	GP04	6	GP05
7	GP06	8	GP07
9	VCC	10	GND

J19: GPIO 1

Pin#	Signal Name	Pin#	Signal Name
1	GP10	2	GP11
3	GP12	4	GP13
5	GP14	6	GP15
7	GP16	8	GP17
9	VCC	10	GND

3 Software Resources

3.1 ICOP Technical Resource Website

In the following website, you will find our latest user manuals, including OS support resources systems such as evaluation images for Windows Embedded Compact 7, Windows Embedded CE 6.0, Windows Embedded CE 5.0, and Windows Embedded 2009. For details, please kindly visit the following link: http://tech.icop.com.tw/

Technical Support Directly from ICOP

To offer you more accurate and specific solutions for the technical situations you have, please prepare the information below before contacting ICOP:

—Product name and serial number

—Description of the H/W environment (i.e.: working temperature, I/O board information, information of connection between main board and IO boards, and/or other devices, etc)

—Description of the S/W environment (i.e: operating system, version, application software, and/or other related information, etc.)

—A detailed description and photos of the technical situation

—Any complement or technical situations you want ICOP more focusing on

User Manual Feedback

To make this user manual more complete, if you have any comments or feedbacks to this manual, please feel free to write to info@icop.com.tw or contact your ICOP sales representative.

Warranty

This product is warranted to be in good working order for a period of one year (12 months) from the date of purchase. Should this product fail to be in good working order at any time during this period, we will, at our option, replace or repair it without additional charge except as set forth in the following terms. This warranty does not apply to products damaged by misuse, modifications, accident or disaster. Vendor assumes no liability for any damages, lost profits, lost savings or any other incidental or consequential damage resulting from the use, misuse of, originality to use this product. Vendor will not be liable for any claim made by any other related party. Return authorization must be obtained from the vendor before returned merchandise is accepted. Authorization can be obtained by calling or faxing the vendor and requesting a Return Merchandise Authorization (RMA) number. Returned goods should always be accompanied by a clear problem description. Should you have questions about warranty and RMA service, please contact us directly.

ICOP Technology Inc.
Address: No. 15 Wugong 5th Road, Xinzhuang Dist.
New Taipei City, Taiwan (R.O.C.) 24890
TEL: +886-2-8990-1933
FAX: +886-2-8990-2045
Mail: info@icop.com.tw
Website: http://www.icop.com.tw