Our Products Make Your Product Better®

To learn more about EMAC's products and services and how they can help your project

http://ftp.emacinc.com/Tech_Info/About_EMAC_Products_and_Services.pdf

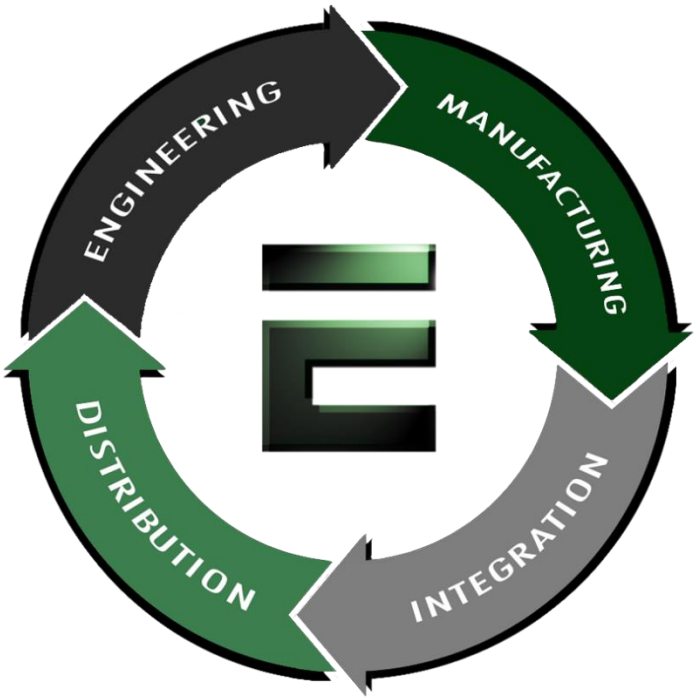

Authorized Distributor, Integrator, and Value-Added Reseller

Manual downloaded from ftp.emacinc.com

For purchase information please contact info@emacinc.com

For technical support please submit a ticket at www.emacinc.com/support

PFM-540I Rev.B

AMD® Geode LX800 Processor

AMD LX800 + CS5536

LU82551ER for 10/100Mbps

18/24-bit TFT LCD Panel

4 COM, 4USB

PFM-540I Manual Rev.B 1st Ed.
June 2008

Copyright Notice

This document is copyrighted, 2008. All rights are reserved. The original manufacturer reserves the right to make improvements to the products described in this manual at any time without notice.

No part of this manual may be reproduced, copied, translated, or transmitted in any form or by any means without the prior written permission of the original manufacturer. Information provided in this manual is intended to be accurate and reliable. However, the original manufacturer assumes no responsibility for its use, or for any infringements upon the rights of third parties that may result from its use.

The material in this document is for product information only and is subject to change without notice. While reasonable efforts have been made in the preparation of this document to assure its accuracy, we assume no liabilities resulting from errors or omissions in this document, or from the use of the information contained herein.

The Manufacturer reserves the right to make changes in the product design without notice to its users.

Acknowledgments

All other products' name or trademarks are properties of their respective owners.

- Award is a trademark of Award Software International, Inc.
- CompactFlash™ is a trademark of the Compact Flash Association.
- Intel®, Pentium® M, and Celeron® M are trademarks of Intel® Corporation.
- Microsoft Windows® is a registered trademark of Microsoft Corp.
- AMD Geode® is a registered trademark of Advanced Micro Devices, Inc.
- ITE is a trademark of Integrated Technology Express, Inc.
- IBM, PC/AT, PS/2, and VGA are trademarks of International Business Machines Corporation.
- SoundBlaster is a trademark of Creative Labs, Inc.

All other product names or trademarks are properties of their respective owners.

Packing List

Before you begin installing your card, please make sure that the following materials have been shipped:

- 9681540I02

  Cable Kit for PFM-540I-B10

1701160201	VGA cable x 1
1709100201	USB Cable x 1
1700060152	Keyboard & Mouse Cable x 1
1701440350	44-pin IDE Cable x 1

- Quick Installation Guide
- Utility CD (optional)
- PFM-540I Rev.B

If any of these items should be missing or damaged, please contact your distributor or sales representative immediately.

Contents

Chapter 1 General Information

1.1 Introduction..... 1-2
1.2 Features 1-3
1.3 Specifications 1-4

Chapter 2 Quick Installation Guide

2.1 Safety Precautions 2-2
2.2 Location of Connectors and Jumpers 2-3
2.3 Mechanical Drawing 2-5
2.4 List of Jumpers 2-7
2.5 List of Connectors 2-8
2.6 Setting Jumpers 2-9
2.7 CFD Master/ Slave Selection (JP1) 2-10
2.8 RS-232 Ring/5V Selection (JP2)..... 2-10
2.9 LCD Clock Selection and Clear CMOS (JP3) 2-10
2.10 Front Panel Connector (CN1) 2-11
2.11 PS2 Keyboard/Mouse Connector (CN2)..... 2-12
2.12 Optional Power Connector (CN3) 2-12
2.13 USB 3-4 Connector (CN4) 2-12
2.14 VGA Display Connector (CN5)..... 2-13
2.15 USB 1-2 Connector (CN6) 2-13
2.16 PC 104 Connector (CN7) 2-13
2.17 LPT Port Connector (CN8)..... 2-14

2.18 IDE Connector (CN9) 2-14
2.19 COM1 Connector (CN10)..... 2-15
2.20 COM3 Connector (CN11)..... 2-16
2.21 Power Connector (CN12)..... 2-16
2.22 COM 2 Connector (CN13)..... 2-16
2.23 Ethernet Connector (CN14) 2-17
2.24 LCD Connector (CN15)..... 2-17
2.25 COM4 Connector (CN16)..... 2-19
2.26 Battery Connector (BAT1)..... 2-19
2.27 DDR 1 SODIMM Slot (SODIMM1) 2-19

Chapter 3 Award BIOS Setup

3.1 System Test and Initialization. 3-2
3.2 Award BIOS Setup 3-3

Chapter 4 Driver Installation

4.1 Software Drivers..... 4-2
4.2 Necessary to know..... 4-3
4.3 Installing VGA Driver..... 4-4
4.4 Installing AES Driver 4-5
4.5 Installing PCI to ISA Bridge Driver 4-6
4.6 Installing Ethernet Driver..... 4-7

Appendix A Programming The Watchdog Timer

A.1 Programming A-2

Appendix B I/O Information

B.1 I/O Address Map.....B-2
B.2 Memory Address Map.....B-2
B.3 IRQ Mapping Chart.....B-3
B.4 DMA Channel Assignments.....B-3

Appendix C Mating Connector

C.1 List of Mating Connectors and Cables..... C-2

Chapter

1

General Information

1.1 Introduction

As a leading company in embedded boards building and manufacturing with a full range of PC/104 CPU Modules, launches an economic version PC/104 CPU Module-PFM-540I REV.B. Its compact size and rich functionality ensures the most cost effective and compatible module to coincide with your existing system planning devices.

PFM-540I Rev.B adopts an AMD Geode LX800 processor that is more cost effective compared to other PC/104 CPU modules on the market. This model supports DDR 333 SODIMM Memory up to 1GB (DDR 400 optional). Although PFM-540I Rev.B is a small board, it offers the full functions customers demand. The chipset of PFM-540I Rev.B deploys AMD LX800 and CS5536 that makes this board achieve high performance. It features one 10/100Base-TX Ethernet port, four USB 2.0 ports, four serial ports, one parallel port, watchdog timer and includes PC/104 expansion.

PFM-540I Rev.B is a RoHS compliant product that is fanless and fully supports ISA and CFD. For Operating Systems, it supports regular embedded OS, such as WinCE, and WinXP Embedded, Windows XP Professional for easy compatibility with customers' existing OS systems.

1.2 Features

- AMD Geode LX800 (500MHz) Processor
- Onboard DDR SDRAM, Max. 1GB for DDR333 and 512MB for DDR400
- 18/24-bit TFT LCD panel
- CFD Type I, ATA-33
- 4 USB 2.0 ports, 4 COM ports and 1 Parallel port
- One 10/100Base-TX Ethernet
- +5V/AT only
- Lead-free & ROHS Compliance

1.3 Specifications

System

- Processor: AMD Geode LX 800 (500MHz) Processor
- System Memory: 200-pin Onboard DDR SDRAM SODIMM x 1, Max. 1GB for DDR333 and 512MB for DDR 400 (Please refer to the Quick Installation Guide ***2.27 DDR1 SODIMM Slot*** for details)
- Chipset: AMD LX 800 + CS5536
- I/O Chipset: SCH3114-NU
- Ethernet: Intel 82551IT/ER, 10/100Mbps, RJ-45 x 1
- BIOS: Award 1MB Flash ROM
- PCI to ISA solution: ITE 8888
- Watchdog Timer: 255 levels
- RTC: CS5536
- Hardware Monitor: SMSC SCH3114
- Solid Storage Disk: CompactFlash™ Type I x 1
- Expansion Interface: PC/104 socket x 1
- Power Requirement: +5V/AT
- Board Size: 3.55”(L) x 3.775”(W) (90mm x 96mm)
- Operating Temperature: 32˚F~ 140˚F (0˚C ~ 60˚C)

Display

- Chipset: AMD LX 800
- Memory: Shared system memory up to 254 MB
- Resolution: Up to 1600 x 1200 @ 32bpp for CRT
  Up to 1024 x 768 @ 18-bit for LCD
- LCD Interface: Up to 18/24-bit TTL TFT LCD

I/O

- Storage: PATA-33 x 1(supports two ATAPI Devices; CompactFlash Type I
- Serial Port: Four COM ports: internal pin headers for 4 COM ports, RS-232 x 3, RS-232/422/485 x 1
- Parallel Port: Supports SPP/EPP/ECP mode
- USB: Four USB2.0 ports
- PS/2 Port: One keyboard and one mouse support

Chapter

2

Quick Installation Guide

Notice:

The Quick Installation Guide is derived from Chapter 2 of user manual. For other chapters and further installation instructions, please refer to the user manual CD-ROM that came with the product.

OZONE SAFE

RECYCLABLE

Part No. 2007540I20 Printed in Taiwan, June 2008

2.1 Safety Precautions

Warning!

Always completely disconnect the power cord from your board whenever you are working on it. Do not make connections while the power is on, because a sudden rush of power can damage sensitive electronic components.

Caution!

Always ground yourself to remove any static charge before touching the board. Modern electronic devices are very sensitive to static electric charges. Use a grounding wrist strap at all times. Place all electronic components on a static-dissipative surface or in a static-shielded bag when they are not in the chassis

2.2 Location of Connectors and Jumpers

Component Side

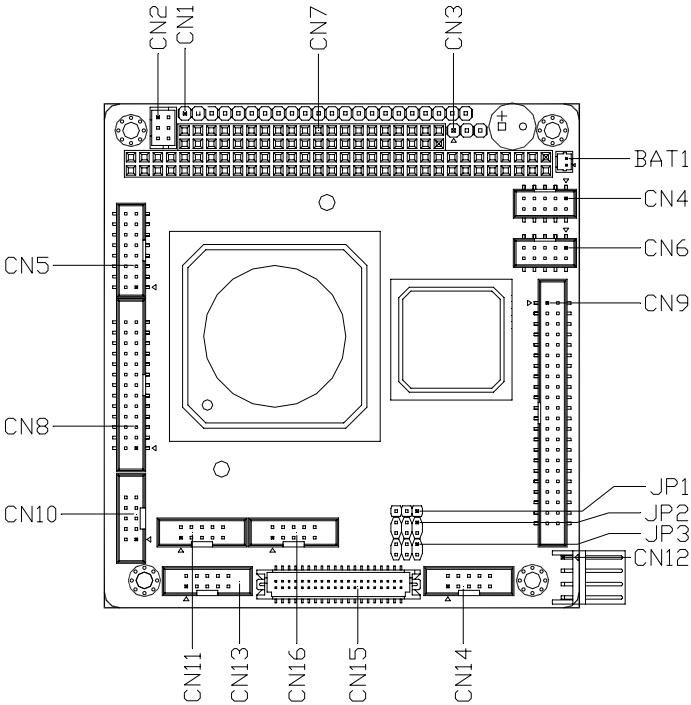

Solder Side

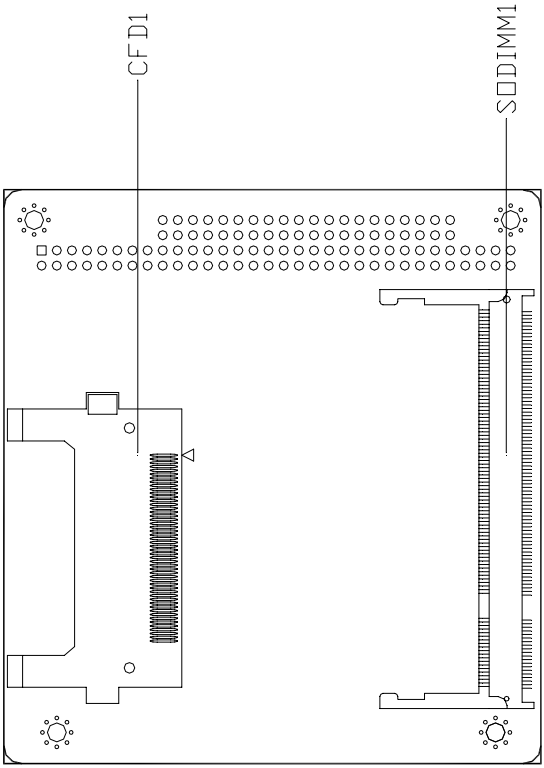

2.3 Mechanical Drawing

Component Side

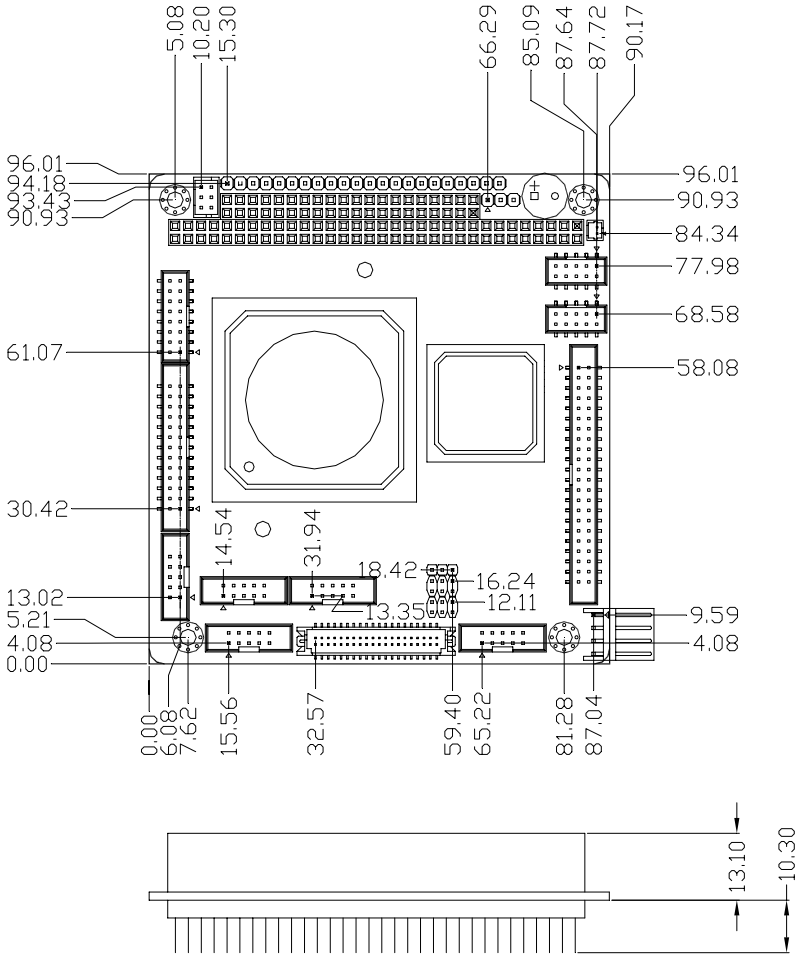

Solder Side

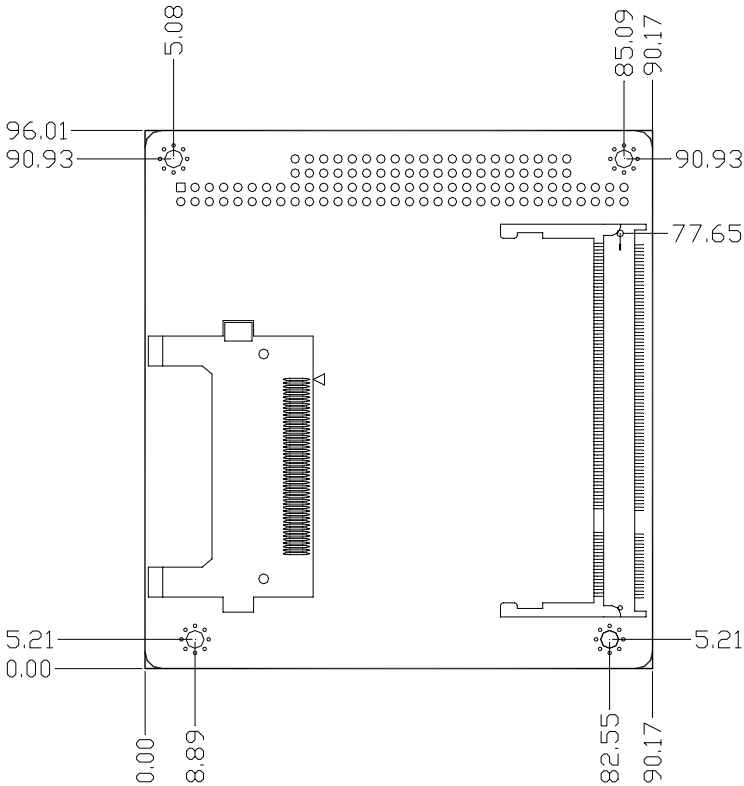
5.08
85.09
90.17
96.01
90.93
90.93
77.65
5.21
0.00
5.21
0.00
8.89
82.55
90.17

2.4 List of Jumpers

The board has a number of jumpers that allow you to configure your system to suit your application.

The table below shows the function of each of the board's jumpers:

Jumpers

Label	Function
JP1	CFD Master/Slave Selection
JP2	RS-232 Ring/5V Selection
JP3	LCD Clock Selection and Clear COMS

2.5 List of Connectors

The board has a number of connectors that allow you to configure your system to suit your application. The table below shows the function of each board's connectors:

Note: For further information about mating connectors, please refer to the appendix of manual.

Connectors

Label	Function
CN1	Front Panel Connector
CN2	PS2 Keyboard/Mouse Connector
CN3	Option Power Connector
CN4	USB Connector
CN5	VGA Display Connector
CN6	USB Connector
CN7	PC/104 Connector
CN8	LPT Port Connector
CN9	IDE Connector
CN10	COM1 Connector
CN11	COM3 Connector
CN12	Power Connector
CN13	COM2 Connector
CN14	Ethernet Connector
CN15	LCD Connector
CN16	COM4 Connector

BAT1	Battery Connector
CFD1	Type1 Compact Flash Slot
SODIMM1	DDR1 SODIMM Slot

2.6 Setting Jumpers

You configure your card to match the needs of your application by setting jumpers. A jumper is the simplest kind of electric switch. It consists of two metal pins and a small metal clip (often protected by a plastic cover) that slides over the pins to connect them. To “close” a jumper you connect the pins with the clip.

To “open” a jumper you remove the clip. Sometimes a jumper will have three pins, labeled 1, 2 and 3. In this case you would connect either pins 1 and 2 or 2 and 3.

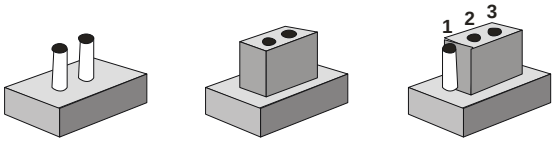

OFF **ON** **ON 2-3**

A pair of needle-nose pliers may be helpful when working with jumpers.

If you have any doubts about the best hardware configuration for your application, contact your local distributor or sales representative before you make any change.

Generally, you simply need a standard cable to make most connections.

.

2.7 CFD Master/Slave Selection (JP1)

JP1	Function
1-2	Slave
2-3	Master (Default)

2.8 RS-232 Ring/5V Selection (JP2)

JP2	Function
COM1	
1-3	+5V
3-5	Ring (Default)
COM2	
2-4	+5V
4-6	Ring (Default)

2.9 LCD Clock Selection and Clear CMOS (JP3)

JP3	Function
LCD Clock	
1-3	Normal (Default)
3-5	Reverse
CMOS	
2-4	Protected (Default)
4-6	Clear

2.10 Front Panel Connector (CN1)

Pin	Signal
1	Power LED(+)
2	Power LED(-)
3	N.C
4	Speaker(+)
5	Speaker(-)
6	N.C
7	IDE LED(+)
8	IDE LED(-)
9	N.C
10	Reset(+)
11	Reset(-)
12	N.C
13	Lan Speed LED(+)
14	Lan Speed LED(-)
15	Lan Active LED(+)
16	Lan Active LED(-)
17	N.C
18	N.C
19	N.C
20	N.C
21	N.C

22	N.C

2.11 PS2 Keyboard/Mouse Connector (CN2)

Pin	Signal	Pin	Signal
1	KB_DATA	2	KB_CLK
3	GND	4	+5V
5	MS_DATA	6	MS_CLK

2.12 Optional Power Connector (CN3)

Pin	Signal
1	-12V
2	-5V
3	GND

2.13 USB (3-4) Connector (CN4)

Pin	Signal	Pin	Signal
1	+5V	2	GND
3	USBD3-	4	GND
5	USBD3+	6	USBD4+
7	GND	8	USBD4-
9	GND	10	+5V

2.14 VGA Display Connector (CN5)

Pin	Signal	Pin	Signal
1	RED	2	+5V
3	GREEN	4	GND
5	BLUE	6	N.C
7	N.C	8	DDCDAT
9	GND	10	HSYNC
11	GND	12	VSYNC
13	GND	14	DDCCLK
15	GND	16	GND

2.15 USB (1-2) Connector (CN6)

Pin	Signal	Pin	Signal
1	+5V	2	GND
3	USBD1-	4	GND
5	USBD1+	6	USBD2+
7	GND	8	USBD2-
9	GND	10	+5V

2.16 PC/104 Connector (CN7)

As standard.

Note: PFM-540I does not support ISA card with DMA or Master mode in PC/104 interface.

.

2.17 LPT Port Connector (CN8)

Pin	Signal	Pin	Signal
1	#STROBE	2	#AFD
3	DATA0	4	#ERROR
5	DATA1	6	#INIT
7	DATA2	8	#SLIN
9	DATA3	10	GND
11	DATA4	12	GND
13	DATA5	14	GND
15	DATA6	16	GND
17	DATA7	18	GND
19	#ACK	20	GND
21	BUSY	22	GND
23	PE	24	GND
25	SELECT	26	N.C

2.18 IDE Connector (CN9)

Pin	Signal	Pin	Signal
1	#RESET	2	GND
3	DATA7	4	DATA8
5	DATA6	6	DATA9
7	DATA5	8	DATA10
9	DATA4	10	DATA11
11	DATA3	12	DATA12

13	DATA2	14	DATA13
15	DATA1	16	DATA14
17	DATA0	18	DATA15
19	GND	20	N.C
21	REQ	22	GND
23	#IOW	24	GND
25	#IOR	26	GND
27	IOREADY	28	GND
29	#DACK	30	GND
31	IRQ	32	N.C
33	ADDR1	34	DETECT
35	ADDR0	36	ADDR2
37	#CS0	38	#CS1
39	HDDLED	40	GND
41	+5V	42	+5V
43	GND	44	N.C

Note: The IDE interface on PFM-540I only supports two IDE devices. If you use a CF card, there is only one IDE device usable.

2.19 COM1 Connector (CN10)

Pin	Signal	Pin	Signal
1	DCD	2	RXD
3	TXD	4	DTR
5	GND	6	DSR

.

7	RTS	8	CTS
9	RI/5V	10	N.C

2.20 COM3 Connector (CN11)

Pin	Signal	Pin	Signal
1	DCD	2	RXD
3	TXD	4	DTR
5	GND	6	DSR
7	RTS	8	CTS
9	RI	10	N.C

2.21 Power Connector (CN12)

Pin	Signal
1	+5V
2	GND
3	GND
4	+12V

2.22 COM 2 Connector (CN13)

Pin	Signal	Pin	Signal
1	DCD(485/422_TX-)	2	RXD(422_RX+)
3	TXD(485/422_TX+)	4	DTR(422_RX-)
5	GND	6	DSR
7	RTS	8	CTS

9	RI/5V	10	N.C

2.23 Ethernet Connector (CN14)

Pin	Signal	Pin	Signal
1	RX-	2	RX+
3	N.C	4	N.C
5	CHASSIS_GND	6	CHASSIS_GND
7	N.C	8	N.C
9	TX+	10	TX-

2.24 LCD Connector (CN15)

24-bit TTL

Pin	Signal	Pin	Signal
1	+5V	2	+5V
3	GND	4	GND
5	+3.3V	6	+3.3V
7	ENBKL	8	GND
9	BLUE0	10	BLUE1
11	BLUE2	12	BLUE3
13	BLUE4	14	BLUE5
15	BLUE6	16	BLUE7
17	GREEN0	18	GREEN1
19	GREEN2	20	GREEN3
21	GREEN4	22	GREEN5

23	GREEN6	24	GREEN7
25	RED0	26	RED1
27	RED2	28	RED3
29	RED4	30	RED5
31	RED6	32	RED7
33	GND	34	GND
35	CLOCK	36	VSYNC
37	DE	38	HSYNC
39	N.C	40	ENAVEE

18-bit TTL

Pin	Signal	Pin	Signal
1	+5V	2	+5V
3	GND	4	GND
5	+3.3V	6	+3.3V
7	ENBKL	8	GND
9	N.C	10	N.C
11	BLUE0	12	BLUE1
13	BLUE2	14	BLUE3
15	BLUE4	16	BLUE5
17	N.C	18	N.C
19	GREEN0	20	GREEN1
21	GREEN2	22	GREEN3
23	GREEN4	24	GREEN5

25	N.C	26	N.C
27	RED0	28	RED1
29	RED2	30	RED3
31	RED4	32	RED5
33	GND	34	GND
35	CLOCK	36	VSYNC
37	DE	38	HSYNC
39	N.C	40	ENAVEE

2.25 COM4 Connector (CN16)

Pin	Signal	Pin	Signal
1	DCD	2	RXD
3	TXD	4	DTR
5	GND	6	DSR
7	RTS	8	CTS
9	RI	10	N.C

2.26 Battery Connector (BAT1)

Pin	Signal	Pin	Signal
1	+3V	2	GND

2.27 DDR1 SODIMM Slot (SODIMM1)

Standard SODIMM Slot

Note from AMD:

Memory configurations supported. Only one DIMM or SODIMM is

supported as long as the configuration requirements are met.

Devices	Max Memory[1]	Max GLIU Frequency	GLCP 4C00000Fh Upper Bits/Lower Bits	GLMC 2000001 Ah Bits【26:24】
4	512M	400MHz	**F2F100FFh/ 56960004h**	4
8	1G	400MHz	**F2F100FFh/ 56960004h**	4
4	512M	333MHz	**F2F100FFh/ 56960004h**	3
8	1G	333MHz	**F2F100FFh/ 56960004h**	3
16	2G	333MHz	**F2F100FFh/ 56960004h**	3

1: Maximum memory is assuming 1Gbit devices.

Below Table for China RoHS Requirements
产品中有毒有害物质或元素名称及含量

Main Board/ Daughter Board/ Backplane

部件名称	有毒有害物质或元素					
	铅 (Pb)	汞 (Hg)	镉 (Cd)	六价铬 (Cr(VI))	多溴联苯 (PBB)	多溴二苯醚 (PBDE)
印刷电路板及其电子组件	×	○	○	○	○	○
外部信号连接器及线材	×	○	○	○	○	○

O：表示该有毒有害物质在该部件所有均质材料中的含量均在 **SJ/T 11363-2006** 标准规定的限量要求以下。

X：表示该有毒有害物质至少在该部件的某一均质材料中的含量超出 **SJ/T 11363-2006** 标准规定的限量要求。

备注：此产品所标示之环保使用期限，系指在一般正常使用状况下。

Chapter

3

Award BIOS Setup

3.1 System Test and Initialization

These routines test and initialize board hardware. If the routines encounter an error during the tests, you will either hear a few short beeps or see an error message on the screen. There are two kinds of errors: fatal and non-fatal. The system can usually continue the boot up sequence with non-fatal errors. Non-fatal error messages usually appear on the screen along with the following instructions:

Press <F1> to RESUME

Write down the message and press the F1 key to continue the boot up sequence.

System configuration verification

These routines check the current system configuration against the values stored in the CMOS memory. If they do not match, the program outputs an error message. You will then need to run the BIOS setup program to set the configuration information in memory.

There are three situations in which you will need to change the CMOS settings:

1. You are starting your system for the first time
2. You have changed the hardware attached to your system
3. The CMOS memory has lost power and the configuration information has been erased.

The PFM-540I CMOS memory has an integral lithium battery backup for data retention. However, you will need to replace the complete unit when it finally runs down.

3.2 Award BIOS Setup

Awards BIOS ROM has a built-in Setup program that allows users to modify the basic system configuration. This type of information is stored in battery-backed CMOS RAM so that it retains the Setup information when the power is turned off.

Entering Setup

Power on the computer and press <Del> immediately. This will allow you to enter Setup.

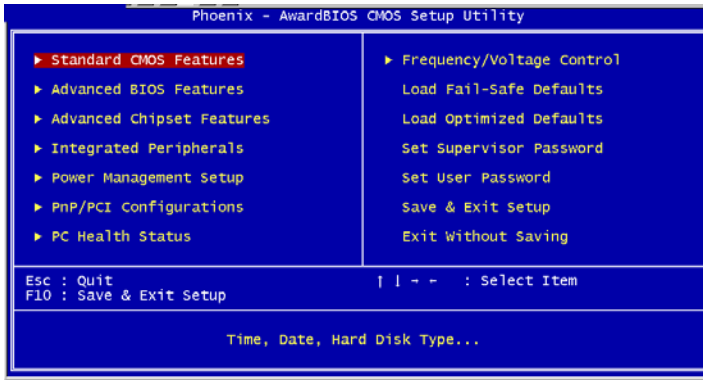

Standard CMOS Features

Use this menu for basic system configuration. (Date, time, IDE, etc.)

Advanced BIOS Features

Use this menu to set the advanced features available on your system.

Advanced Chipset Features

Use this menu to change the values in the chipset registers and optimize your system performance.

Integrated Peripherals

Use this menu to specify your settings for integrated peripherals. (Primary slave, secondary slave, keyboard, mouse etc.)

Power Management Setup

Use this menu to specify your settings for power management. (HDD power down, power on by ring, KB wake up, etc.)

PnP/PCI Configurations

This entry appears if your system supports PnP/PCI.

PC Health Status

This menu allows you to set the shutdown temperature for your system.

Frequency/Voltage Control

Use this menu to specify your settings for auto detect DIMM/PCI clock and spread spectrum.

Load Fail-Safe Defaults

Use this menu to load the BIOS default values for the minimal/stable performance for your system to operate.

Load Optimized Defaults

Use this menu to load the BIOS default values that are factory settings for optimal performance system operations. While AWARD has designated the custom BIOS to maximize performance, the factory has the right to change these defaults to meet their needs.

Set Supervisor/User Password

Use this menu to set Supervisor/User Passwords.

Save and Exit Setup

Save CMOS value changes to CMOS and exit setup.

Exit Without Saving

Abandon all CMOS value changes and exit setup.

Chapter 4

Driver Installation

4.1 Software Drivers

This chapter describes the operation and installation of the display drivers supplied on the Supporting CD-ROM that are shipped with your product. The onboard VGA adapter is based on the AMD LX VGA Flat Panel/CRT controller. This controller offers a large set of extended functions and higher resolutions. The purpose of the enclosed software drivers is to take advantage of the extended features of the AMD LX VGA Flat Panel/CRT controller.

Hardware Configuration

Some of the high-resolution drivers provided in this package will work only in certain system configurations. If a driver does not display correctly, try the following:

1. Change the display controller to CRT-only mode, rather than flat panel or simultaneous display mode. Some high-resolution drivers will display correctly only in CRT mode.

2. If a high-resolution mode does not support your system, try to use a lower-resolution mode. For example, 1024 x 768 mode will not work on some systems, but 800 x 600 mode supports the most.

4.2 Necessary to Know

The instructions in this manual assume that you understand elementary concepts of MS-DOS and the IBM Personal Computer. Before you attempt to install any driver from the *Supporting CD-RO*M, you should:

- Know how to copy files from a CD-ROM to a directory on the hard disk
- Understand the MS-DOS directory structure

  If you are uncertain about any of these concepts, please refer to the DOS or OS/2 user reference guides for more information before you proceed with the installation.

Before you begin

The Supporting CD-ROM contains different drivers for corresponding Windows OS, please choose the specific driver for your Windows OS.

4.3 Installing VGA Driver

Win XP / Win XPe VGA

Place the Driver CD-ROM into your CD-ROM drive and follow the steps below to install.

1. Click on **Start** button.
2. Click on **Settings** button.
3. Click on **Control Panel** button.
4. Click on **System** button.
5. Select **Hardware** and click on **Device Manager…**.
6. Double click on **Video Controller (VGA Compatible)**.
7. Click on **Update Driver…**.
8. Click on **Next**.
9. Select **Search for a suitable driver…**, then click on **Next**.
10. Select **Specify a location**, then click on **Next**.
11. Click on **Browse**.
12. Select "l**x_win"** file from CD-ROM **(Drivers/Step 1 – LX_Graphics)** then click on **Open**.
13. Click on **OK**.
14. Click on **Next**.
15. Click on **Yes**.
16. Click on **Finish**.

Note: The user must install this system driver before install other device drivers.

4.4 Installing AES Driver

Win XP / Win XPe Geode LX AES Crypto

Place the Driver CD-ROM into your CD-ROM drive and follow the steps below to install.

1. Click on **Start** button.
2. Click on **Settings** button.
3. Click on **Control Panel** button.
4. Click on **System** button.
5. Select **Hardware** and click on **Device Manager…**.
6. Double click on **Entertainment Encryption/Decryption Controller**.
7. Click on **Update Driver…**.
8. Click on **Next**.
9. Select **Search for a suitable driver…**, then click on **Next**.
10. Select **Specify a location**, then click on **Next**.
11. Click on **Browse**.
12. Select **"GeodeLX_XP_WDM_AES_v2.01.00"** file from CD-ROM **(Driver/Step 2 – AES)** then click on **Open**.
13. Click on **OK**.
14. Click on **Next**.
15. Click on **Yes**.
16. Click on **Finish**.

4.5 Installing PCI to ISA Bridge Driver

Win XP / Win XPe System

Place the Driver CD-ROM into your CD-ROM drive and follow the steps below to install.

1. Click on **Start** button.
2. Click on **Settings** button.
3. Click on **Control Panel** button.
4. Click on **System** button.
5. Select **Hardware** and click on **Device Manager…**.
6. Double click on **Other PCI Bridge Device**
7. Click on **Update Driver…**.
8. Click on **Next**.
9. Select **Search for a suitable driver…**, then click on **Next**.
10. Select **Specify a location**, then click on **Next**.
11. Click on **Browse**.
12. Select "**Ite**" file from CD-ROM **(Drivers/Step 3 – PCI to ISA Bridge)** then click on **open**.
13. Click on **OK**.
14. Click on **Next**.
15. Click on **Finish**.

4.6 Installing Ethernet Driver

Place the Driver CD-ROM into your CD-ROM drive and follow the steps below to install.

1. Click on **Start** button.
2. Click on **Settings** button.
3. Click on **Control Panel** button.
4. Click on **System** button.
5. Select **Hardware** and click on **Device Manager…**.
6. Double click on **Ethernet Controller**.
7. Click on **Update Driver…**.
8. Click on **Next**.
9. Select **Search for a suitable driver…**, then click on **Next**.
10. Select **Specify a location**, then click on **Next**.
11. Click on **Browse**.
12. Select **"**Select "**Intel 82551ER Driver**" folder from CD-ROM (**Driver/Step 4 - Intel LAN driver**) then click on **Open**.
13. Click on **OK**.
14. Click on **Next**.
15. Click on **Yes**.
16. Click on **Finish**

Appendix

A

Programming the Watchdog Timer

A.1 Programming

PFM-540I Rev.B utilizes SCH3114-NU chipset as its watchdog timer controller.

The SCH311X WDT (Watch Dog Timer) has a programmable time-out ranging from 1 to 255 minutes with one minute resolution, or 1 to 255 second resolution. The unit of the WDT timeout value are selected via bit[7] of the WDT_TIMEOUT register. The WDT time-out value is set through the WDT_VAL Runtime register. Setting The WDT_VAL register to 0x00 disables the WDT function (this is its power on default).
Setting the WDT_VAL to any other non-zero value will cause the WDT to reload and begin counting down from the value loaded. When the WDT count value reaches zero the counter stops and sets the Watchdog time-out status bit in the WDT_CTRL Runtime register. Note: Regardless of the current state of the WDT, the WDT time-out status bit can be directly set or cleared by the Host CPU.

The related register for configuring WDT is list as follows:

NAME	REG OFFSET (HEX)	DESCRIPTION
GP60 Default = 0x01 on VTR POR	47 (R/W)	General Purpose I/O bit 6.0 Bit[0] In/Out : =1 Input, =0 Output Bit[1] Polarity : =1 Invert, =0 No Invert Bit[3:2] Alternate Function Select 11=WDT 10=Either Edge Triggered Interrupt Input 4 (Note 26.20) 01=LED1 00=GPIO Bits[6:4] Reserved Bit[7] Output Type Select 1=Open Drain 0=Push Pull

WDT_TIME_OUT Default = 0x00 on VCC POR, VTR POR, and PCI Reset	65 (R/W)	Watch-dog Timeout Bit[0] Reserved Bit[1] Reserved Bits[6:2] Reserved, = 00000 Bit[7] WDT Time-out Value Units Select = 0 Minutes (default) = 1 Seconds
WDT_VAL Default = 0x00 on VCC POR, VTR POR, and PCI Reset	66 (R/W)	Watch-dog Timer Time-out Value Binary coded, units = minutes (default) or seconds, selectable via Bit[7] of WDT_TIME_OUT register (0x52). 0x00 Time out disabled 0x01 Time-out = 1 minute (second) ..... 0xFF Time-out = 255 minutes (seconds)

NAME	REG OFFSET (HEX)	DESCRIPTION
WDT_CFG Default = 0x00 on VCC POR, VTR POR, and PCI Reset	67 (R/W)	Watch-dog timer Configuration Bit[0] Reserved Bit[1] Keyboard Enable =1 WDT is reset upon a Keyboard interrupt. =0 WDT is not affected by Keyboard interrupts. Bit[2] Mouse Enable =1 WDT is reset upon a Mouse interrupt. =0 WDT is not affected by Mouse interrupts. Bit[3] Reserved Bits[7:4] WDT Interrupt Mapping 1111 = IRQ15 ..... 0011 = IRQ3 0010 = IRQ2 (Note) 0001 = IRQ1 0000 = Disable Note: IRQ2 is used for generating SMI events via the serial IRQ's stream. The WDT should not be configured for IRQ2 if the IRQ2 slot is enabled for generating an SMI event.
WDT_CTRL Default = 0x00 on VCC POR and VTR POR Default = 0000000xb on PCI Reset Note: Bit[0] is not cleared by PCI Reset	68 (R/W) Bit[2] is Write-Only	Watch-dog timer Control Bit[0] Watch-dog Status Bit, R/W =1 WD timeout occurred =0 WD timer counting Bit[1] Reserved Bit[2] Force Timeout, W =1 Forces WD timeout event; this bit is self-clearing Bit[3] P20 Force Timeout Enable, R/W = 1 Allows rising edge of P20, from the Keyboard Controller, to force the WD timeout event. A WD timeout event may still be forced by setting the Force Timeout Bit, bit 2. **Note**: If the P20 signal is high when the enable bit is set a WD timeout event will be generated. = 0 P20 activity does not generate the WD timeout event. Note: The P20 signal will remain high for a minimum of 1us and can remain high indefinitely. Therefore, when P20 forced timeouts are enabled, a self-clearing edge-detect circuit is used to generate a signal which is OR'ed with the signal generated by the Force Timeout Bit. Bit[7:4] Reserved. Set to 0

The following is a sample code to set WDT for 3 seconds.

```
;Runtime register I/O base address
SUPERIO_GPIO_PORT        EQU   800h
.MODEL     SMALL
.CODE

begin:
      ;enable WDT
         mov  dx, SUPERIO_GPIO_PORT + 47h
        mov   al, 0Ch
        out   dx, al
      ;WDT_TIME_OUT register
         mov  dx, SUPERIO_GPIO_PORT + 65h
        mov   al, 80h                          ;unit is second
        out   dx, al
      ;WDT_VAL register
        mov   dx, SUPERIO_GPIO_PORT + 66h
        mov    al, 03h                         ;3 seconds
        out   dx, al
       ;exit
        mov   ah,4ch
        int   21h

        END  begin
```

Appendix

B

I/O Information

B.1 I/O Address Map

- TOM-7F81C92DE22
  - Direct memory access (DMA)
  - Input/output (IO)
    - [00000000 - 0000000F] Direct memory access controller
    - [00000020 - 00000021] Programmable interrupt controller
    - [00000022 - 0000003F] PCI bus
    - [00000040 - 00000043] System timer
    - [00000044 - 00000047] PCI bus
    - [0000004C - 0000006F] PCI bus
    - [00000070 - 00000071] System CMOS/real time clock
    - [00000072 - 0000007F] PCI bus
    - [00000081 - 00000083] Direct memory access controller
    - [00000087 - 00000087] Direct memory access controller
    - [00000089 - 0000008B] Direct memory access controller
    - [0000008F - 00000091] Direct memory access controller
    - [00000093 - 0000009F] PCI bus
    - [000000A0 - 000000A1] Programmable interrupt controller
    - [000000A2 - 000000BF] PCI bus
    - [000000C0 - 000000DF] Direct memory access controller
    - [000000E0 - 000000EF] PCI bus
    - [000000F0 - 000000FF] Numeric data processor
    - [00000100 - 00000CF7] PCI bus
    - [00000D00 - 0000FFFF] PCI bus
  - Interrupt request (IRQ)
  - Memory

B.2 1st MB Memory Address Map

- TOM-7F81C92DE22
  - Direct memory access (DMA)
  - Input/output (IO)
  - Interrupt request (IRQ)
  - Memory
    - [00000000 - 0009FFFF] System board
    - [000A0000 - 000BFFFF] PCI bus
    - [000C8000 - 000EEFFF] PCI bus
    - [000E0000 - 000EFFFF] Motherboard resources
    - [000F0000 - 000F3FFF] Motherboard resources
    - [000F4000 - 000F7FFF] Motherboard resources
    - [000F8000 - 000FBFFF] Motherboard resources
    - [000FC000 - 000FFFFF] Motherboard resources
    - [00100000 - 00FFFFFF] System board
    - [0F7C0000 - FFFEFFFF] PCI bus
    - [FFFC0000 - FFFFFFFF] System board

B.3 IRQ Mapping Chart

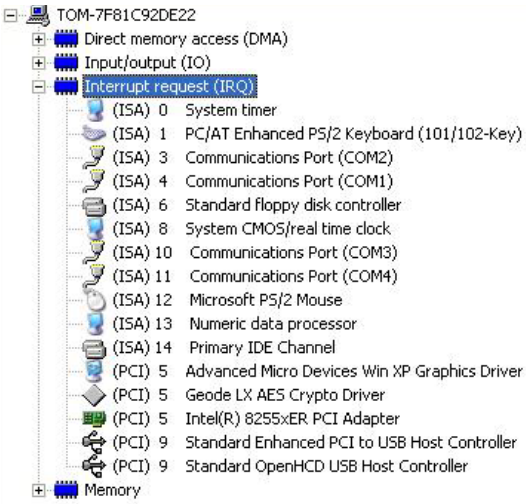

B.4 DMA Channel Assignments

Appendix C

Mating Connecotor

C.1 List of Mating Connectors and Cables

The table notes mating connectors and available cables.

Connector Label	Function	Mating Connector		Available Cable	MFG Cable P/N
		Vendor	Model no		
CN1	Front Panel Connector	Neltron	2226A-XX		N/A
CN2	PS2 Keyboard/ Mouse Connector	Neltron	2026B--XX	Keyboard & Mouse Cable	1700060152
CN3	Option Power Connector	Dupont	2541-1H		N/A
CN4	USB Connector	Neltron	2026B--XX	USB Cable	1709100201
CN5	VGA Display Connector	Neltron	2026B--XX	CRT Cable	1701160201
CN6	USB Connector	Neltron	2026B--XX	USB Cable	1709100201
CN8	LPT Port Connector	Keentop	1014 Series	Parallel Port Cable	1701260201
CN9	IDE Connector	Keentop	1014 Series	IDE Cable	1701440350
CN10	COM1 Connector	Keentop	1014 Series	Serial Port Cable	1701100207
CN11	COM3 Connector	Keentop	1014 Series	Serial Port Cable	1701100207
CN12	Power Connector	Ever	2542H-04		N/A
CN13	COM2 Connector	Keentop	1014 Series	Serial Port Cable	1701100207
CN14	Ethernet Connector	Keentop	1014 Series	Ethernet Cable	1700100200
CN15	LCD Connector	HO TIEN	1255H		N/A

CN16	COM4 Connector	Keentop	1014 Series	Serial Port Cable	1701100207
BAT1	Battery Connector	HRS	DF14-MS-1 .25C		N/A