PCM-9375

3.5" SBC w/AMD LX800, VGA, LCD, LAN, USB2.0 and SSD

User Manual

Copyright

This document is copyrighted, © 2006. All rights are reserved. The original manufacturer reserves the right to make improvements to the products described in this manual at any time without notice.

No part of this manual may be reproduced, copied, translated or transmitted in any form or by any means without the prior written permission of the original manufacturer. Information provided in this manual is intended to be accurate and reliable. However, the original manufacturer assumes no responsibility for its use, nor for any infringements upon the rights of third parties that may result from such use.

Acknowledgement

Award is a trademark of Award Software International, Inc.
VIA is a trademark of VIA Technologies, Inc.
IBM, PC/AT, PS/2 and VGA are trademarks of International Business Machines Corporation.
Intel, Pentium, Celeron, and MMX are registered trademarks of Intel Corporation.

Microsoft Windows® is a registered trademark of Microsoft Corp.
RTL is a trademark of Realtek Semi-Conductor Co., Ltd.
ESS is a trademark of ESS Technology, Inc.
UMC is a trademark of United Microelectronics Corporation.
SMI is a trademark of Silicon Motion, Inc.
Creative is a trademark of Creative Technology LTD.
All other product names or trademarks are properties of their respective owners.

This manual is for the PCM-9375.

Part No. 2006937511 2nd Edition

Printed in Taiwan Sep. 2007

Packing List

Before you begin installing your card, please make sure that the following materials have been shipped:

- 1 PCM-9375 SBC
- 1 Startup manual
- 1 Utility CD
- 1 mini jumper pack p/n: 9689000002
- 1 Audio cable p/n: 1700160160
- 1 IDE 44 pin cable p/n: 1701440351
- 1 USB 2 port Cable p/n: 1703100121
- 1 Parallel port cable p/n: 1700001977
- 1 Keyboard/Mouse cable p/n: 1700060202
- 1 x COM2/3/4 cable p/n: 1700001971
- 1 x LAN cable p/n: 1701100202
- Optional Accessories
  - 1700002150 COM2 cable for RS-422/485
  - 1703200201 ATX Power control cable
- Floppy Disk module
  - 9696937580E PCM-9375 FDD module
  - 1701340700 Flat cable 34-pin for FDD
  - 170000212 2x LPT cable

If any of these items are missing or damaged, contact your distributor or sales representative immediately.

Model No. List	**Description**
PCM-9375E-J0A1E	3.5" SBC w/AMD LX800, VGA, LVDS, LAN, USB
PCM-9375F-J0A1E	3.5" SBC w/AMD LX800, VGA, TTL, LAN, USB

Additional Information and Assistance

Contact your distributor, sales representative, or customer service center for technical support if you need additional assistance. Please have the following information ready before you call:

- Product name and serial number
- Description of your peripheral attachments
- Description of your software (operating system, version, application software, etc.)
- A complete description of the problem
- The exact wording of any error messages

FCC

This device complies with the requirements in part 15 of the FCC rules: Operation is subject to the following two conditions:

1.This device may not cause harmful interference, and

2.This device must accept any interference received, including interference that may cause undesired operation

This equipment has been tested and found to comply with the limits for a Class A digital device, pursuant to Part 15 of the FCC Rules. These limits are designed to provide reasonable protection against harmful interference when the equipment is operated in a commercial environment. This equipment generates, uses, and can radiate radio frequency energy and, if not installed and used in accordance with the instruction manual, may cause harmful interference to radio communications. Operation of this device in a residential area is likely to cause harmful interference in which case the user will be required to correct the interference at his/her own expense. The user is advised that any equipment changes or modifications not expressly approved by the party responsible for compliance would void the compliance to FCC regulations and therefore, the user's authority to operate the equipment.

Caution!

Achtung!

There is a danger of a new battery exploding if it is incorrectly installed. Do not attempt to recharge, force open, or heat the battery. Replace the battery only with the same or equivalent type recommended by the manufacturer. Discard used batteries according to the manufacturer's instructions

Contents

Chapter 1 Introduction 2
1.1 Introduction 2
1.2 Features 2
1.3 Specifications 3
1.3.1 Standard 3.5" Biscuit SBC Functions 3
1.3.2 VGA/LVDS Interface 3
1.3.3 Ethernet Interface 4
1.3.4 Audio Function 4
1.3.5 OS support 4
1.3.6 Mechanical and Environmental 4
1.4 Board layout: dimensions 5
Figure 1.1:Dimension of PCM-9375F 5
Figure 1.2:Dimension of PCM-9375E 5
Figure 1.3:Dimension of PCM-9375 for H 6
Figure 1.4:PCM-9375 Mechanical Drawing(Solder side) 6
Chapter 2 Installation 8
2.1 Jumpers 8
Table 2.1:Jumpers 8
2.1.1 AT/ATX Selector(J1) 8
Table 2.2: AT/ATX Selector(J1) 8
2.1.2 Clear CMOS(J2) 8
Table 2.3: Clear CMOS(J2) 8
2.1.3 COM2 Setting (J3) 8
Table 2.4: COM2 Setting (J3) 8
2.1.4 Audio Power (J4) 9
Table 2.5: Audio Power (J4) 9
2.1.5 TV enable (J5) 9
Table 2.6:TV enable 9
2.2 Connectors 10
Table 2.7:Connectors 10
2.3 Locating Connectors 11
Figure 2.1:Connectors (component side) 11
Figure 2.2:Connectors (solder side) 11
2.4 Setting Jumpers 12
2.5 Installing SO-DIMM 13
2.6 IDE, CDROM hard drive connector (CN11) 14
2.6.1 Connecting the hard drive 14
2.7 Solid State Disk 14
2.7.1 CompactFlash (CN10) 14

2.8 Parallel port connector (CN17) 14
2.9 Keyboard and PS/2 mouse connector (CN14) 15
2.10 Power & HDD LED Connector (LED1, CN3) 15
2.10.1 Power & HDD LED Connector(LED1)..... 15
2.10.2 Power Reset button (CN3)..... 15
2.11 Power connectors (CN2) 15
2.11.1 Main power connector, +5 V, +12 V (CN2)..... 15
2.11.2 ATX Feature connector (CN1, CN8)..... 15
2.12 Audio interfaces (CN22) 16
2.12.1 Audio connector (CN22) 16
2.13 COM port connector (CN16,CN19)..... 16
2.13.1 Serial Port RS-422/485 (CN18, J3) 16
Table 2.8:Serial Port RS-422/485 (J3)..... 16
2.14 VGA/LCD/LVDS interface connections 17
2.14.1 CRT display connector (CN12)..... 17
2.14.2 TTL TFT LCD connector (CN4)..... 17
2.14.3 LVDS LCD panel connector (CN4) 17
2.15 Ethernet configuration..... 17
2.15.1 100Base-T connector (CN23, CN24) 17
2.15.2 Network boot (Depends on Ethernet Controller)..... 17
2.16 Watchdog timer configuration 17
2.17 USB connectors (CN13,CN15)..... 18
2.18 GPIO (General Purpose Input Output) (CN9)..... 18
Chapter 3 BIOS Operation.....20
3.1 BIOS Introduction 20
3.2 BIOS Setup..... 20
Table 3.1:Controll Keys..... 20
3.2.1 Main Menu..... 21
3.2.2 Standard CMOS Features 23
3.2.3 Advanced BIOS Features..... 25
3.2.4 Advanced Chipset Features 28
3.2.5 Integrated Peripherals 30
3.2.6 Power Management Setup 33
3.2.7 PnP/PCI Configurations..... 35
3.2.8 PC Health Status 36
3.2.9 Load Optimized Defaults..... 37
3.2.10 Set Password 38
3.2.11 Save & Exit Setup..... 40
3.2.12 Quit Without Saving 41
Chapter 4 PCI SVGA/LCD Setup 44
4.1 Introduction 44
4.1.1 Display type 44
4.1.2 Dual Simultaneous Display 44

4.1.3 CMOS setting for panel type 44
4.2 Connections to Two Standard LCDs..... 45
4.2.1 AMD Geode LX 45
Table 4.1:Connections to Sharp LQ121S1DG31 / PCM-937545
4.3 Installation of the VGA and AES Driver 47
4.3.1 Installation chipset AES driver 47
4.3.2 Installation of VGA driver 51
4.3.3 PCI Bridge 55
4.4 Further Information 57
Chapter 5 Audio Setup.....60
5.1 Introduction 60
5.2 Driver installation..... 60
5.2.1 Before you begin..... 60
5.2.2 Windows XP drivers 61
Appendix A Pin Assignments 66
A.1 Stand-by Power Input (CN1)..... 66
Table A.1:Stand-by Power Input (CN1) 66
A.2 Power Input (CN2) 66
Table A.2:Power Input (CN2) 66
A.3 Reset Button (CN3)..... 67
Table A.3:Reset Button (CN3) 67
A.4 TFT LCD (CN4)..... 67
Table A.4:TFT LCD (CN4) (PCM-9375F) 67
Table A.5:TFT 18-Bit/24-Bit Panel Output Mapping Table (PCM-9375F)69
Table A.6:PCM-9375E-J0A1E pin assignment..... 70
A.5 Inverter Power (CN5) 71
Table A.7:Inverter Power (CN5) 71
A.6 ATX Power Button (CN8) 72
Table A.8:ATX Power Button (CN8)..... 72
A.7 GPIO (CN9) 72
Table A.9:GPIO (CN9)..... 72
A.8 CF (CN10) 73
Table A.10:CF (CN10) 73
A.9 IDE (CN11) 75
Table A.11:IDE (CN11) 75
A.10 CRT (CN12)..... 77
Table A.12:CRT (CN12) 77
A.11 USB1/2 (CN13), USB3/4 (CN15)..... 78
Table A.13:USB1/2 (CN13), USB3/4 (CN15) 78
A.12 COM2/3/4 (CN16) 79
Table A.14:COM2/3/4 (CN16)..... 79

A.13 Print Port (CN17) 81
Table A.15:Print Port (CN17) 81
A.14 RS-422/485 (CN18) 83
Table A.16:RS-422/485 (CN18) 83
A.15 COM1 (CN19) 83
Table A.17:COM1 (CN19) 83
A.16 ISA -5 V & -12 V Input (CN21) 84
Table A.18:ISA -5 V & -12 V Input (CN21) 84
A.17 Audio (CN22) 85
Table A.19:Audio (CN22) 85
A.18 LAN1 (CN23) 86
Table A.20:LAN1 (CN23) 86
A.19 LAN2 (CN24) 87
Table A.21:LAN2 (CN24) 87
Appendix B System Assignments 90
B.1 System I/O Ports 90
Table B.1:System I/O ports 90
B.2 1st MB memory map 91
Table B.2:1st MB memory map 91
B.3 DMA channel assignments 91
Table B.3:DMA channel assignments 91
B.4 Interrupt assignments 92
Table B.4:Interrupt assignments 92
Appendix C Mechanical Drawings 94
C.1 Mechanical Drawings 94
Figure C.1:Dimension of PCM-9375F (TTL) 94
Figure C.2:Dimension of PCM-9375E (LVDS) 95
Figure C.3:Dimension of PCM-9375 for H 95
Figure C.4:PCM-9375 Mechanical Drawing(Solder side) 96
Appendix D Watchdog Timer 98

CHAPTER 1

General Information

This chapter gives background information on the PCM-9375.

Sections include:

- Introduction
- Features
- Specifications
- Board layout and dimensions

Chapter 1 Introduction

1.1 Introduction

The PCM-9375 is a fanless, best-cost, performance 3.5" SBC (Single Board Computer) geared to satisfy the needs for various industrial computing equipment. PCM-9375 is ideal for communication, gaming and medical applications that require flat panel support using digital displays with TTL or LVDS interfaces and two Ethernet ports.
For those who want superior performance for various low-power embedded applications, PCM-9375 uses an AMD LX-800 processor clocked at 500 MHz, in conjunction with flexible DDR333 system memory through one SODIMM socket.
PCM-9375 offers convenient connector layout, easy assembly, multiple I/O, and includes two 10/100Mbps Ethernet, four USB (Universal Serial Bus) 2.0 and four serial ports for easy system expansibility.

1.2 Features

- AMD low power LX800 500MHz Processor
- Supports DDR memory
- Supports 24-bit TFT LCD interface (PCM-9375F)
- Supports 18-bit LVDS LCD display (PCM-9375E)
- Supports Dual 100Base-T Fast Ethernet
- Supports Four USB2.0 ports
- Supports Four COM ports
- PC/104 expansion interface
- Connector *Coastline* (external connector layout) same as PCM-5820

1.3 Specifications

1.3.1 Standard 3.5" Biscuit SBC Functions

- **CPU:** AMD Geode® LX800 processor, up to 500 MHz
- **System Memory:** 1 x SODIMM socket, support Double Data Rate (DDR) SDRAM, Max 512 MB, accept 128/256/512 MB, DDR333 SDRAM
- **2nd Cache Memory:** 128 KB on the processor
- **System Chipset:** AMD Geode LX800
- **BIOS:** AWARD 4 Mbit Flash BIOS
- **Watchdog timer:** 255 levels timer interval
- **Expansion Interface:** PC/104
- **Battery:** Lithium 3V/196 mAH
- **Power management:** APM 1.2, ACPI supported
- **Enhanced IDE interface:** One channel supports up to two EIDE devices. BIOS auto-detect, PIO Mode 3 or Mode 4, supports UDMA 33/66 mode
- **Serial ports:** Four serial ports, 4 ports for RS-232 (COM1: DB9 con nector on the front site, COM2, 3, 4: by box header), 1 port for RS-422/485 (CN18: by pin header with auto-flow controller). COM2, 3, 4 is with a Hirose connector 40 pin
- **Parallel port:** One parallel port, supports SPP/EPP mode
- **Keyboard/mouse connector:** Supports one standard PC/AT keyboard and a PS/2 mouse
- **Audio:** Support AC97 Audio stereo sound
- **USB:** Four USB 2.0 compliant universal serial bus ports
- **Solid State Disk (SSD):** Supports one 50-pin socket for CFC type I (type II optional)

1.3.2 VGA/LVDS Interface

- **Chipset:** AMD Geode LX800
- **Memory Size:** Optimized Shared Memory Architecture, support 64MB frame buffer using system memory
- **Resolution:** CRT resolution: up to 1600 x 1200 x 16 bpp at 100 Hz and up to 1024 x 768 x 32 bpp at 60 Hz for TFT LCD
- **LCD Interface:** Supports up to 24-bit TFT LCD (TTL signal) (PCM-9375F)
- **LVDS Interface:** Supports one channel 18-bit LVDS Interface (PCM-9375E)
- **Dual Simultaneous Display:** CRT + TTL LCD, CRT + LVDS

1.3.3 Ethernet Interface

• **Chipset supports:** 2 x 10/100Mbps - Realtek RTL8100
• **Interface:** 1 x RJ-45 connector, and 1 x internal box header
• **Connector:** One RJ-45 connector, and one internal box header
• Standard IEEE 802.3u (100 BASE-T) protocol compatible
• Built-in boot ROM (RTL8100)

1.3.4 Audio Function

• **Audio controller:** Realtek ACL203 chipset, supports AC97 3D Audio stereo sound

• **Audio interface:** Microphone in, Line in, Line out, Speak out

1.3.5 OS support

• This board supports Win XP, Win CE and Win XPe.

1.3.6 Mechanical and Environmental

• **Dimensions:** 145 x 102 mm (5.9" x 4.2")
Mechanical Drawing (dxf file) is available.
• **Power Supply Type:** AT/ATX
• **Power Requirement:** +5 V ± 5%, +12 V ± 5% (Optional), +5 V standby for ATX mode or support single +5 V power only
• **Power Consumption:**
(Geode LX800, 256 MB DDR333)

Max: +5 V @ 1.2 A, +12 V @ 0.23 A

Typical: +5 V @ 1.29 A, +12 V @ 0.09A

• **Operating temperature:** 0 ~ 60°C (32 ~ 140°F)

• **Operating Humidity:** 10% ~ 90% relative humidity, non-condensing

• **Weight:** 0.85 kg (reference weight of total package)

1.4 Board layout: dimensions

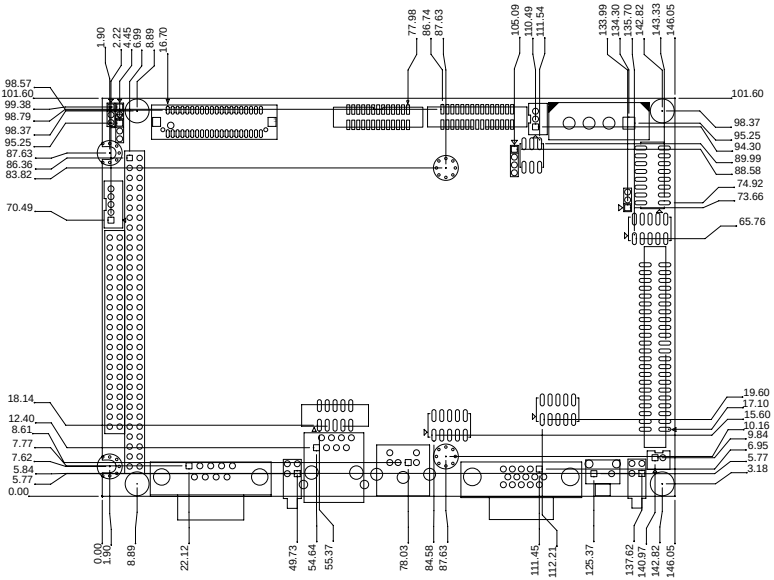

Figure 1.1: Dimension of PCM-9375F

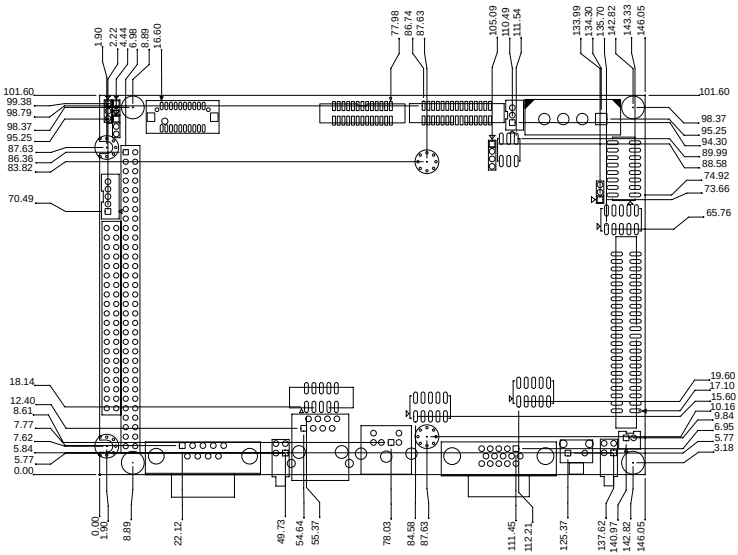

Figure 1.2: Dimension of PCM-9375E

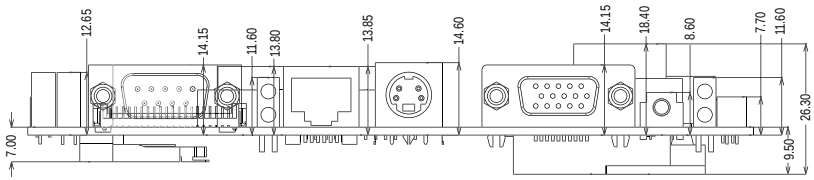

Figure 1.3: Dimension of PCM-9375 for H

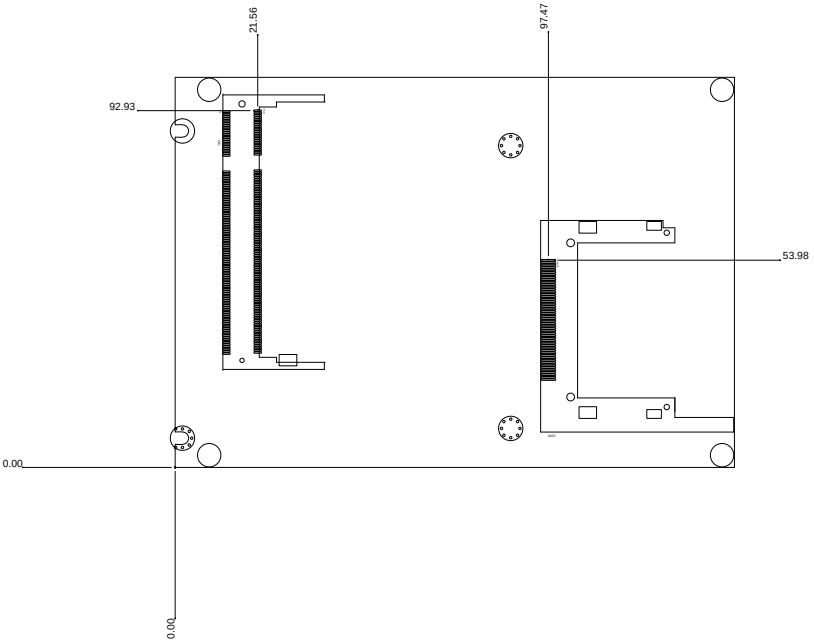

Figure 1.4: PCM-9375 Mechanical Drawing(Solder side)

CHAPTER 2

Installation

This chapter explains the setup procedures of the PCM-9375 hardware, including instructions on setting jumpers and connecting peripherals, switches and indicators. Be sure to read all safety precautions before you begin the installation procedure.

Chapter 2 Installation

2.1 Jumpers

The PCM-9375 has a number of jumpers that allow you to configure your system to suit your application. The table below lists the functions of the various jumpers.

Table 2.1: Jumpers

Label	Function
J1	AT/ATX Selector
J2	Clear CMOS
J3	COM2 Setting
J4	Audio Power
J5	TV Enable

2.1.1 AT/ATX Selector(J1)

Table 2.2: AT/ATX Selector(J1)

Setting	Function
1-2*	AT
None	ATX
*: default	

2.1.2 Clear CMOS(J2)

Table 2.3: Clear CMOS(J2)

Setting	Function
1-2*	BAT
2-3	Clear CMOS
*: default	

2.1.3 COM2 Setting (J3)

Table 2.4: COM2 Setting (J3)

Setting	Function
1-2*	RS-232
3-4	RS-485
5-6	RS-422
*: default	

2.1.4 Audio Power (J4)

Table 2.5: Audio Power (J4)

Setting	Function
1-2*	With + 12 v
2-3	Without + 12 V
*: default	

2.1.5 TV enable (J5)

Table 2.6: TV enable

Setting	Function
1-2*	TV Enable
NONE	TV Disable
*: default	

2.2 Connectors

Onboard connectors link the PCM-9375 to external devices such as hard disk drives, a keyboard, or floppy drives. The table below lists the function of each of the board's connectors.

Table 2.7: Connectors

Label	Function
CN1	Stand-by Power Input
CN2	Power Input
CN3	Reset Button
CN4	TFT LCD (PCM-9375F)/LVDS(PCM-9375E)
CN5	Inverter Power
CN6	SMBus
CN7	DDR-SODIMM
CN8	ATX Power Button
CN9	GPIO
CN10	CF
CN11	IDE
CN12	CRT
CN13	USB1/2
CN14	Keyboard/Mouse
CN15	USB3/4
CN16	COM2/3/4
CN17	Print Port
CN18	RS-422/485
CN19	COM1
CN20	PC/104
CN21	ISA -5 V & -12 V Input
CN22	Audio
CN23	LAN1
CN24	LAN2

2.3 Locating Connectors

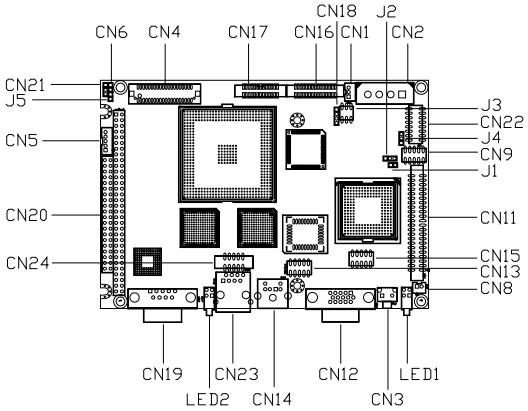

Figure 2.1: Connectors (component side)

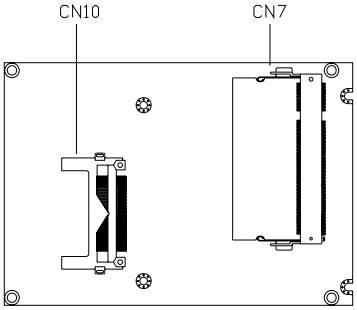

Figure 2.2: Connectors (solder side)

2.4 Setting Jumpers

You may configure your card to match the needs of your application by setting jumpers. A jumper is a metal bridge used to close an electric circuit. It consists of two metal pins and a small metal clip (often protected by a plastic cover) that slides over the pins to connect them. To “close” a jumper, you connect the pins with the clip. To “open” a jumper, you remove the clip. Sometimes a jumper will have three pins, labeled 1, 2 and 3. In this case you would connect either pins 1 and 2, or 2 and 3.

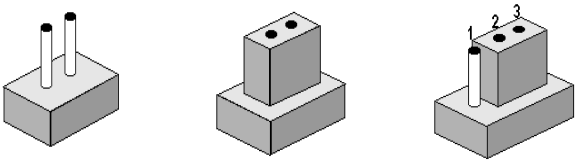

open closed closed 2-3

The jumper settings are schematically depicted in this manual as follows:.

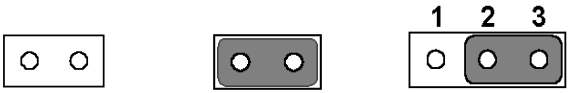

open closed closed 2-3

A pair of needle-nose pliers may be helpful when working with jumpers. If you have any doubts about the best hardware configuration for your application, contact your local distributor or sales representative before you make any changes. Generally, you simply need a standard cable to make most connections.

2.5 Installing SO-DIMM

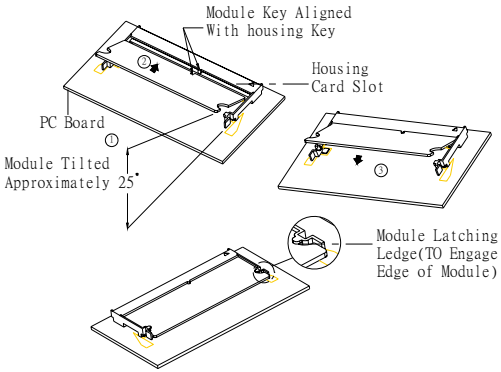

The procedures for installing SODIMMs are described below. Please follow these steps carefully. You can install SDRAM memory modules using 200-pin SODIMMs (Small Outline Dual In-line Memory Modules).

1. Ensure that all power supplies to the system are switched off.
2. Tilt the SODIMM card approximately 25° above the board, and move it in the direction of the housing card slot. Make sure that the key in the module and the key in the housing are aligned.
3. Push the module into the socket until the module bottoms. There should be a slight insertion force to engage the module into the contacts.

2.6 IDE, CDROM hard drive connector (CN11)

The board provides 1 IDE channels which you can attach up to two Enhanced Integrated Device Electronics hard disk drives or CDROM to the board's internal controller. Its IDE controller uses a PCI interface. This advanced IDE controller supports faster data transfer, PIO mode 3, mode 4 and up to UDMA33.

2.6.1 Connecting the hard drive

Connecting drives is done in a daisy-chain fashion. This package includes One 44PIN IDE cable that can connect to 1.8" and 2.5" drives.

1. Connect one end of the cable to Hard Drive connector. Make sure that the red (or blue) wire corresponds to pin 1 on the connector, which is labeled on the board (on the right side).
2. Plug the other end of the cable into the Enhanced IDE hard drive, with pin 1 on the cable corresponding to pin 1 on the hard drive. (See your hard drive's documentation for the location of the connector.)

2.7 Solid State Disk

The board provides a CompactFlash™ card type I socket and type II for optional kit.

2.7.1 CompactFlash (CN10)

The CompactFlash card shares a primary IDE channel and set it as the master.

2.8 Parallel port connector (CN17)

Normally, the parallel port is used to connect the card to a printer. The board includes a multi-mode (ECP/EPP) parallel port accessed via CN17 and a 26-pin flat-cable connector. You will need an adapter cable if you use a traditional DB-25 connector. The adapter cable has a 26-pin connector on one end, and a DB-25 connector on the other.

The parallel port is designated as LPT1, and can be disabled or changed to LPT2 or LPT3 in the system BIOS setup.

The parallel port interrupt channel is designated to be IRQ7.

You can select ECP/EPP DMA channel via BIOS setup.

2.9 Keyboard and PS/2 mouse connector (CN14)

The board provides a keyboard connector that supports both a keyboard and a PS/2 style mouse. In most cases, especially in embedded applications, a keyboard is not used. If the keyboard is not present, the standard PC/AT BIOS will report an error or fail during power-on self-test (POST) after a reset. The PCM board's BIOS standard setup menu allows you to select "All, But Keyboard" under the "Halt On" selection. This allows no-keyboard operation in embedded system applications, without the system halting under POST.

2.10 Power & HDD LED Connector (LED1, CN3)

2.10.1 Power & HDD LED Connector(LED1)

The HDD LED indicator for hard disk access is an active low signal (24 mA sink rate). Power supply activity LED indicator.

2.10.2 Power Reset button (CN3)

Momentarily pressing the reset button will activate a reset. The switch should be rated for 10 mA, 5 V.

2.11 Power connectors (CN2)

2.11.1 Main power connector, +5 V, +12 V (CN2)

Supplies main power to the PCM-9375 (+5 V), and to devices that require +12 V.

2.11.2 ATX Feature connector (CN1, CN8)

The PCM-9375 can support ATX power supply by CN1 connector as well as J1 jumper setting. Also, an advanced power bottom (CN8) is supported if any ATX power supply is used, optional cable (P/N: 1703200201) can be used for ATX feature conjecturer.

Note: Be sure that the ATX power supply can take at least a 10 mA load on the 5 V standby lead (5VSB). If not, you may have difficulty powering up your system.

2.12 Audio interfaces (CN22)

2.12.1 Audio connector (CN22)

The board provides all major audio signals on a 10-pin cable connector, These audio signals include Microphone in (mono), Line in (stereo) and Line out (stereo).

2.13 COM port connector (CN16,CN19)

The board provides four serial RS-232 ports (CN19: COM1) in one DB-9 connector and one Hirose 40 pin connector (CN16: COM2/3/4) with auto-flow control. It provides connections for serial devices (a mouse, etc.) or a communication network. You can find the pin assignments for the COM port connector in Appendix C.

2.13.1 Serial Port RS-422/485 (CN18, J3)

Serial port can be configured to operate in RS-422 and RS-485 mode.

This is done via using connector CN18 and setting jumper J3.

Table 2.8: Serial Port RS-422/485 (J3)

Setting	Function
1-2	RS-232
3-4	RS-485
5-6	RS-422

2.14 VGA/LCD/LVDS interface connections

The board's PCI SVGA interface can drive conventional CRT displays and is capable of driving a wide range of flat panel displays.

2.14.1 CRT display connector (CN12)

The CRT display connector is a 15-pin D-SUB connector used for conventional CRT displays.

2.14.2 TTL TFT LCD connector (CN4)

For PCM-9375F series, CN4 consists of a 40-pin connector which can support up to 24-bit LCD panel. It is Hirose's product no. DF13A-40DP-1.25 V

2.14.3 LVDS LCD panel connector (CN4)

Four PCM-9375E series, the board supports 1 channel 18-bit LVDS LCD panel displays.

2.15 Ethernet configuration

The board is equipped with two high performance 32-bit PCI-bus Ethernet interface which are fully compliant with IEEE 802.3U 10/100Mbps standards. They are supported by all major network operating systems.

2.15.1 100Base-T connector (CN23, CN24)

100Base-T connections are made via one RJ-45 connector and one internal 10-pin box header.

2.15.2 Network boot (Depends on Ethernet Controller)

The Network Boot feature can be utilized by incorporating the Boot ROM image files for the appropriate network operating system. The Boot ROM BIOS files are included in the system BIOS, which is on the utility CD disc.

2.16 Watchdog timer configuration

An onboard watchdog timer reduces the chance of disruptions which EMP (electro-magnetic pulse) interference can cause. This is an invaluable protective device for standalone or unmanned applications. Setup involves one jumper and running the control software (refer to Appendix D).

2.17 USB connectors (CN13,CN15)

The board provides up to four USB (Universal Serial Bus) ports using Plug and Play. The USB interfaces comply with High Speed USB specification Rev. 2.0 which supports 480Mbps transfer rate, and are fuse protected.

The USB interface is accessed through two 5 x 2-pin flat-cable connectors. You will need an adapter cable if you use a standard USB connector. The adapter cable has a 5 x 2-pin connector on one end and a USB connector on the other.

The USB interfaces can be disabled in the system BIOS setup.

2.18 GPIO (General Purpose Input Output) (CN9)

The board supports 8-bit GPIO through GPIO connector. The 8 digital inputs and outputs can be programmed to read or control devices, with each input or output defined. The default setting is 8 bits input.

CHAPTER 3

BIOS Operation

Chapter 3 BIOS Operation

3.1 BIOS Introduction

PCM-9375 comes with Award's BIOS 6.0 that delivers superior performance, compatibility and functionality, it's many options and extensions let you customize your products to a wide range of designs and target markets.

The modular, adaptable Award BIOS 6.0 supports the broadest range of third-party peripherals and all popular chipsets from: Intel, AMD, nVidia, VIA, and compatible CPUs from 386 through Pentium and AMD Geode, K7 and K8 (including multiple processor platforms), and VIA Eden C3 and C7 CPU.

You can use BIOS utilities to select and install features to suit your own designs.

3.2 BIOS Setup

The PCM-9375 Series system has build-in Award BIOS with a CMOS SETUP utility which allows user to configure required settings or to activate certain system features.

The CMOS SETUP saves the configuration in the CMOS RAM of the motherboard. When the power is turned off, the battery on the board supplies the necessary power to the CMOS RAM.

When the power is turned on, press the <Del> button during the BIOS POST (Power-On Self Test) will take you to the CMOS SETUP screen.

CONTROL KEYS:

Table 3.1: Controll Keys

<↑ ><↓ ><← ><→ >	Move to select item
<Enter>	Select Item
<Esc>	Main Menu - Quit and not save changes into CMOS
	Sub Menu - Exit current page and return to Main Menu
<Page Up/+>	Increase the numeric value or make changes
<Page Down/->	Decrease the numeric value or make changes
<F1>	General help, for Setup Sub Menu

Table 3.1: Controll Keys	
<F2>	Item Help
<F5>	Load Previous Values
<F7>	Load Optimized Default
<F10>	Save all CMOS changes

3.2.1 Main Menu

Press <Del> to enter Award BIOS CMOS Setup Utility, the Main Menu will appear on the screen. Use arrow keys to select among the items and press <Enter> to accept or enter the sub-menu.

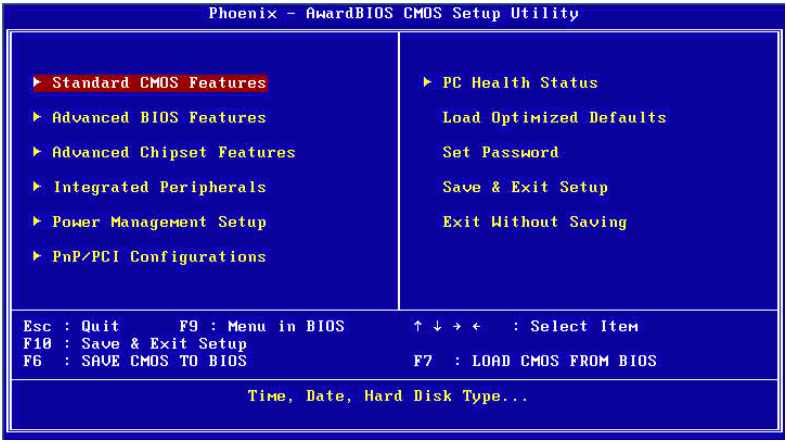

- **Standard CMOS Features**

  This setup page includes all the items in standard compatible BIOS.

- **Advanced BIOS Features**

  This setup page includes all the items of Award BIOS enhanced fea tures.

- **Advanced Chipset Features**

  This setup page includes all the items of Chipset configuration features.

- **Integrated Peripherals**

  This setup page includes all onboard peripheral devices.

- **Power Management Setup**

This setup page includes all the items of Power Management features.

- **PnP/PCI Configurations**

This setup page includes PnP OS and PCI device configuration.

- **PC Health Status**

This setup page includes the system auto detect CPU and system temperature, voltage, fan speed.

- **Load Optimized Defaults**

This setup page includes Load system optimized value, and the system would be in best performance configuration.

- **Set Password**

Establish, change or disable password.

- **Save & Exit Setup**

Save CMOS value settings to CMOS and exit BIOS setup.

- **Exit Without Saving**

Abandon all CMOS value changes and exit BIOS setup.

3.2.2 Standard CMOS Features

```
Phoenix - AwardBIOS CMOS Setup Utility
Standard CMOS Features

Date (mm:dd:yy)                Fri, Jan 19 2007          Item Help
Time (hh:mm:ss)                10 : 22 : 55
                                                         Menu Level  ►
► IDE Channel 0 Master                                   Press [Enter] to enter
► IDE Channel 0 Slave                                    next page for detail
► IDE Channel 1 Master                                   hard drive settings
► IDE Channel 1 Slave

Drive A                        [1.44M, 3.5 in.]
Drive B                        [None]

Video                          [EGA/VGA]
Halt On                        [All Errors]

Base Memory                         638K
Extended Memory                       1K
Total Memory                       1024K

↑↓→←:Move  Enter:Select  +/-/PU/PD:Value  F10:Save  ESC:Exit  F1:General Help
           F5:Previous Values             F7: Optimized Defaults
```

- **Date**

  The date format is <week>, <month>, <day>, <year>.

Week	From Sun to Sat, determined and display by BIOS only
Month	From Jan to Dec.
Day	From 1 to 31
Year	From 1999 through 2098

- **Time**

  The times format in <hour> <minute> <second>, base on the 24-hour time.

- **IDE Channel 0 Master/Slave**

  IDE HDD Auto-Detection Press "Enter" for automatic device detection.

- **IDE Channel 1 Master/Slave**

  IDE HDD Auto-Detection Press "Enter" for automatic device detection.

- **Drive A / Drive B**

  The Item identifies the types of floppy disk drive A or drive B.

None	No floppy drive installed
360K, 5.25"	5.25 inch PC-type standard drive; 360K byte capacity
1.2M, 5.25"	5.25 inch AT-type high-density drive; 1.2M byte capacity

720K, 3.5"	3.5 inch double-sided drive; 720K byte capacity
1.44M, 3.5"	3.5 inch double-sided drive; 1.44M byte capacity
2.88M, 3.5"	3.5 inch double-sided drive; 2.88M byte capacity

- **Halt on**

  The item determines whether the computer will stop if an error is detected during power up.

No Errors	The system boot will not stop for any error.
All Errors	Whenever the BIOS detects a non-fatal error the system will be stopped.
All, But Keyboard	The system boot will not stop for a keyboard error; it will stop for all other errors. (Default value)
All, But Diskette	The system boot will not stop for a disk error; it will stop for all other errors.
All, But Disk/Key	The system boot will not stop for a keyboard or disk error; it will stop for al other errors.

- **Base Memory**

  The POST of the BIOS will determine the amount of base (or conventional) memory installed in the system.

- **Extended Memory**

  The POST of the BIOS will determine the amount of extended memory (above 1MB in CPU's memory address map) installed in the system.

- **Total Memory**

  This item displays the total system memory size.

3.2.3 Advanced BIOS Features

```
Phoenix - AwardBIOS CMOS Setup Utility
Advanced BIOS Features

  Virus Warning                [Disabled]        Item Help
  CPU Internal Cache           [Enabled]
  Quick Power On Self Test     [Enabled]   Menu Level  ►
  First Boot Device            [Floppy]
  Second Boot Device           [CDROM]     Allows you to choose
  Third Boot Device            [HDD-0]     the VIRUS warning
  Boot Other Device            [Enabled]   feature for IDE Hard
  Boot Up NumLock Status       [On]        Disk boot sector
  Gate A20 Option              [Fast]      protection. If this
  Typematic Rate Setting       [Disabled]  function is enabled
x Typematic Rate (Chars/Sec) 6               and someone attempt to
x Typematic Delay (Msec)      250            write data into this
  Security Option              [Setup]     area ,  BIOS will show
  OS Select For DRAM > 64MB    [Non-OS2]   a warning message on
  Video BIOS Shadow            [Enabled]   screen and alarm beep
  C8000-CBFFF Shadow           [Disabled]
  CC000-CFFFF Shadow           [Disabled]
  D0000-D3FFF Shadow           [Disabled]
  D4000-D7FFF Shadow           [Enabled]

↑↓→←:Move  Enter:Select  +/-/PU/PD:Value  F10:Save  ESC:Exit  F1:General Help
           F5:Previous Values             F7: Optimized Defaults
```

- **Virus Warning [Disabled]**

  This item allows user to choose the VIRUS Warning feature for IDE Hard Disk boot sector protection.

- **CPU Internal Cache [Enabled]**

  This item allows user to enable CPU internal cache.

- **Quick Power On Self Test [Enabled]**

  This field speeds up the Power-On Self Test (POST) routine by skipping retesting a second, third and forth time. Setup setting default is enabled.

- **First / Second / Third / Other Boot Drive**

Floppy	Select boot device priority by Floppy.
LS120	Select boot device priority by LS120.
Hard Disk	Select boot device priority by Hard Disk.
CD ROM	Select boot device priority by CDROM.
ZIP	Select boot device priority by ZIP.
USB-FDD	Select boot device priority by USB-FDD.
USB-ZIP	Select boot device priority by USB-ZIP.
USB-CD ROM	Select boot device priority by USB-CDROM.
USB-HDD	Select boot device priority by USB-HDD.
LAN	Select boot device priority by LAN.
Disabled	Disable this boot function.

- **Boot Up Floppy Seek [Enabled]**

  When enabled, the BIOS will seek the floppy “A” drive one time

- **Boot Up NumLock Status [On]**

  This item enables users to activate the Number Lock function upon system boot

- **Gate A20 Option [Fast]**

This item enables users to switch A20 control by port 92 or not.

- **Typematic Rate Setting [Disabled]**

  This item enables users to set the two typematic controls items.

  This field controls the speed at

  - Typematic Rate (Chars/Sec)

    This item controls the speed at system registers repeated keystrokes.

    Eight settings are 6, 8, 10, 12, 15, 20, 24 and 30.

  - Typematic Delay (Msec)

    This item sets the time interval for displaying the first and second characters.

    Four delay rate options are 250, 500, 750 and 1000.

- **Security Option [Setup]**

System	System can not boot and can not access to Setup page if the correct password is not entered at the prompt.
Setup	System will boot, but access to Setup if the correct password is not entered at the prompt. (Default value)

- **OS Select For DRAM > 64M [Non-OS2]**

  Select OS2 only if system is running OS/2 operation system with greater than 64MB of RAM on the system

- **Video BIOS Shadow [Enabled]**

  Enabled copies Video BIOS to shadow RAM improves performance

C8000-CBFFF Shadow [Disabled]

It’s for shadow control of item.

CC000-CFFFF Shadow [Disabled]

It’s for shadow control of item.

D0000-D3FFF Shadow [Disabled]

It's for shadow control of item.

D4000-D7FFF Shadow [Disabled]

It's for shadow control of item.

D8000-DBFFF Shadow [Disabled]

It's for shadow control of item.

DC000-DFFFF Shadow [Disabled]

- **Small Logo (EPA) Show [Enabled]**

  Show EPA logo during system post stage

- **Cyrix 6X86/MII CPUID [Enabled]**

  This item allows user to control bios enabled or disabled CPUID for CPU Cyrix/MII.

3.2.4 Advanced Chipset Features

```
                    Phoenix - AwardBIOS CMOS Setup Utility
                         Advanced Chipset Features

  CPU Frequency                [Auto]                    Item Help
x Memory Frequency              400 MHz
  Video Memory Size            [   8 M]                 Menu Level  ►

  Output display               [CRT]
x Flat Panel Configuration     Press Enter

  Onboard Audio                [Enabled]
  Onboard USB1.1               [Enabled]
  Onboard USB2.0               [Enabled]
  Onboard IDE                  [Enabled]
  Memory Hole At 15M-16M       [Disabled]

  Overcurrent reporting        [Disabled]
  Port 4 assigment             [Host]

↑↓→←:Move  Enter:Select  +/-/PU/PD:Value  F10:Save  ESC:Exit  F1:General Help
           F5:Previous Values             F7: Optimized Defaults
```

NOTE: *This "Advanced Chipset Features" option controls the configuration of the board's chipset, this page is developed by Chipset independent, for control chipset register setting and fine tune system performance. It is strongly recommended only technical users make changes to the default settings.*

- **CPU Frequency [Enabled]**

  This item enables users to set the CPU Host clock by system automatic detection or by manual.

- **Memory Frequency [400 MHz] (Show Only)**

  This item enables users to set the Memory Host clock by system automatic detection or by manual.

- **Video Memory Size [8 M]**

  This item allows user to adjust VGA share memory size for personal purpose.

- **Output Display [CRT]**

  This item allows user to choose screen display of type. Bios default value is set to "CRT".

- **Flat Panel Configuration [Press Enter] (Show Only)**

  This item is provided Flat panel function for user to adjustment.

- **Onboard Audio [Enabled]**

  This item is controller to enabled or disabled motherboard of audio device.

- **Onboard USB1.1 [Enabled]**

  This item is controller to enabled or disabled motherboard of USB1.1 device.

- **Onboard USB2.0 [Enabled]**

  This item is controller to enabled or disabled motherboard of USB2.0 device.

- **Onboard IDE [Enabled]**

  This item is controller to enabled or disabled motherboard of IDE device.

- **Memory Hole At 15M-16M[Disabled]**

  This item reserves 15MB-16MB memory address space to ISA expansion cards that specifically require the setting. Memory from 15MB-16MB will be unavailable to the system because of the expansion cards can only access memory at this area.

- **Overcurrent Reporting [Disabled]**

  This item is enabled or disabled that usb overcurrent report function. Bios default suggest to Disabled.

- **Port 4 assignment [Host]**

  This item allows user to changed USB port 4 of mode.

3.2.5 Integrated Peripherals

```
Phoenix - AwardBIOS CMOS Setup Utility
Integrated Peripherals

On-Chip IDE Channel 1        [Enabled]          Item Help
Master Drive PIO Mode        [Auto]
Slave  Drive PIO Mode        [Auto]             Menu Level  ►
IDE Primary Master UDMA      [Auto]
IDE Primary Slave  UDMA      [Auto]
IDE DMA transfer access      [Enabled]
LAN1 controller              [Enabled]
LAN2 controller              [Enabled]
► ITE8888 Configure          [Press Enter]
IDE HDD Block Mode           [Enabled]
LPT/FDC switch:              [Disabled]
Onboard Serial Port 1        [3F8]
Onboard Serial Port 1 use    [IRQ4]
Onboard Serial Port 2        [2F8]
Onboard Serial Port 2 use    [IRQ3]
Onboard Serial Port 3        [3E8]
Onboard Serial Port 3 use    [IRQ10]
Onboard Serial Port 4        [2E8]
Onboard Serial Port 4 use    [IRQ5]

↑↓→←:Move  Enter:Select  +/-/PU/PD:Value  F10:Save  ESC:Exit  F1:General Help
           F5:Previous Values             F7: Optimized Defaults
```

NOTE: *This "Integrated Peripherals" option controls the configuration of the board's chipset, includes IDE, ATA, SATA, USB, AC97, MC97 and Super IO and Sensor devices, this page is developed by Chipset independent.*

- **On-Chip IDE Channel 1**

  This item enables chipset IDE device 1 of controller.

- **Master Drive PIO Mode [Auto]**

  This item allows user to adjust master IDE mode of type for modification purpose. Bios default value suggest to "Auto".

- **Slave Drive PIO Mode [Auto]**

  This item allows user to adjust slave IDE mode of type for modification purpose. Bios default value suggest to "Auto".

- **IDE Primary Master UDMA [Auto]**

  This item allows user to adjust primary master IDE mode of type for modification purpose. Bios default value suggest to "Auto".

- **IDE Primary Slave UDMA [Auto]**

  This item allows user to adjust primary slave IDE mode of type for modification purpose. Bios default value suggest to "Auto".

- **IDE DMA transfer access [Enabled]**

  This item allows user to adjust IDE DMA mode. It will increase IDE Data transfer of speed. Bios default value suggest to "Enabled".

- **LAN1 Controller [Enabled]**

  This item is enabled or disabled that onboard of LAN1 controller. Bios default value suggest to “Enabled”.

- **LAN2 Controller [Enabled]**

  This item is enabled or disabled that onboard of LAN2 controller. Bios default value suggest to “Enabled”.

- **ITE8888 Configure [Press Enter]**

  This item allows user to changed ITE8888 of detail adjust.

- **IDE HDD Block Mode [Enabled]**

  This item allows enabled or disabled that IDE block data transfer mode. It will speed up HDD data transfer of efficiency. Bios default value suggest to “Enabled”.

- **LPT/FDC switch: [Disabled]**

  This item is switch LPT/FDC port by item. It will changed from LPT to FDC port. Bios default value suggest to “Disabled”.

- **Onboard Serial Port 1 [3F8]**

  This item allows user to change com 1 of address. Bios default value suggest to “3F8”.

- **Onboard Serial Port 1 use [IRQ4]**

  This item allows user to change com 1 of IRQ. Bios default value suggest to “IRQ4”.

- **Onboard Serial Port 2 [2F8]**

  This item allows user to change com 2 of address. Bios default value suggest to “2F8”.

- **Onboard Serial Port 2 use [IRQ3]**

  This item allows user to change com 2 of IRQ. Bios default value suggest to “IRQ3”.

- **Onboard Serial Port 3 [3E8]**

  This item allows user to change com 3 of address. Bios default value suggest to “3E8”.

- **Onboard Serial Port 3 use [IRQ10]**

  This item allows user to change com 3 of IRQ. Bios default value suggest to “IRQ10”.

- **Onboard Serial Port 4 [2E8]**

  This item allows user to change com 4 of address. Bios default value suggest to “2E8”.

- **Onboard Serial Port 4 use [IRQ5]**

  This item allows user to change com 4 of IRQ. Bios default value suggest to “IRQ5”.

- **Auto Flow Control [Disabled]**

  This item allows user to control com port of auto flow transfer. Bios default value suggest to “Disabled”.

- **Onboard Parallel Port [378/IRQ7]**

  This item allows user to change parallel port of address. Bios default value suggest to “378/IRQ7”.

- **Onboard Parallel Mode [Standard]**

  This item allows user to change parallel port of mode. User can choose “SPP”, “EPP”, “±ECP” and “ECP+EPP”. SPP (Standard Parallel Port).ECP(Extended Capabilities Port). EPP(Enhanced Parallel Port). Bios default value suggest to “Normal”.

- **ECP Mode Use DMA [3]**

  This item allows user to change DMA channel for parallel port. Bios default value suggest to “3”.

3.2.6 Power Management Setup

```
Phoenix - AwardBIOS CMOS Setup Utility
Power Management Setup

× ACPI Function              Enabled          Item Help
  Power Management           [ACPI]
                                              Menu Level  ▶
        ** PM Timers **
× Standby Mode               Disabled
× Suspend Mode               Disabled

  MODEM Use IRQ              [N/A]
  Soft-Off by PWR-BTTN       [Instant-Off]
  Power-On by Alarm          [Disabled]
× Time (hh:mm:ss) Alarm        0
×                              0
×                              0      :
▶ IRQ Wakeup Events          [Press Enter]
  PWRON After PWR-Fail       [Off]
  WDT Time-out Value Unit    [Minutes]
  WDT Time-out Value         [00]

↑↓→←:Move  Enter:Select  +/-/PU/PD:Value  F10:Save  ESC:Exit  F1:General Help
           F5:Previous Values             F7: Optimized Defaults
```

NOTE: *This "Power management Setup" option configure system to most effectively saving energy while operating in a manner consistent with your computer use style.*

- **ACPI Function [Enabled] (Show Only)**

  This item defines the ACPI (Advanced Configuration and Power Management) feature that makes hardware status information available to the operating system, and communicate PC and system devices for improving the power management.

- **Power Management [ACPI]**

  - Legacy

  It will open two item for adjust "Standby Mode" and "Suspend Mode".

  - APM

  APM (Advanced Power Management function).

  - ACPI

  ACPI (Advanced Configuration and Power Management)

- **Standby Mode [Disabled]**

  This item allows user to select standby of time. Range from 1 sec to 120 Min.

- **Suspend Mode [Disabled]**

  This item allows user to select suspend of time. Range from 1 sec to 120 Min.

- **Modem use IRQ [N/A]**

  This item allows user to determine the IRQ which the MODEM can use.

- **Soft-Off by PWR-BTTN [Instant-Off]**

  This item allows user to define function of power button.

Instant-Off	Press power button then Power off instantly.
Delay 4 Sec	Press power button 4 sec. to Power off.

- **Power-On by Alarm [Disabled]**

  This item allows user to enable and key in Date/time to power on system.

Disabled	Disable this function.
Enabled	Enable alarm function to power on system.

  Time (HH:MM:SS)Alarm(0-23) : (0-59) : 0-59)

- **IRQ Wakeup Events [Press Enter]**

  This item allows user to control wakeup from which IRQ event.

- **PWRON After PWR-Fail [off]**

  This item allows user to enabled or disable power fail function.

- **WDT Time-out Value Unit [Minutes]**

  This item allows user to choose watch dog timer of unit.

- **WDT Time-out Value [00]**

  This item determines which count times for watch dog timer.

3.2.7 PnP/PCI Configurations

```
Phoenix - AwardBIOS CMOS Setup Utility
Power Management Setup

× ACPI Function              Enabled          Item Help
  Power Management           [ACPI]
                                              Menu Level  ►
        ** PM Timers **
× Standby Mode               Disabled
× Suspend Mode               Disabled

  MODEM Use IRQ              [N/A]
  Soft-Off by PWR-BTTN       [Instant-Off]
  Power-On by Alarm          [Disabled]
× Time (hh:mm:ss) Alarm        0
×                              0
×                              0      :
► IRQ Wakeup Events          [Press Enter]
  PWRON After PWR-Fail       [Off]
  WDT Time-out Value Unit    [Minutes]
  WDT Time-out Value         [00]

↑↓→←:Move  Enter:Select  +/-/PU/PD:Value  F10:Save  ESC:Exit  F1:General Help
           F5:Previous Values             F7: Optimized Defaults
```

NOTE: *This "PnP/PCI Configurations" option is setting up the IRQ and DMA (both PnP and PCI bus assignments.*

- **PNP OS Installed [No]**

  This item allows user to determine PNP function install or not.

- **Init Display First [Onboard]**

  This item is setting for start up Video output from Onboard or PCI device.

- **Reset Configuration Data [Disabled]**

  This item allow user to clear any PnP configuration data stored in the BIOS.

- **Resources Controlled By [Auto (ESCD)]**

  - IRQ Resources

    This item allows you respectively assign an interruptive type for IRQ-3, 4, 5, 7, 9, 10, 11, 12, 14, and 15.

  - Memory Resources

    This item allows you respectively assign a memory block from N/A to DC00.

- **PCI VGA Palette Snoop [Disabled]**

  The item is designed to solve problems caused by some non-standar d VGA cards. A built-in VGA system does not need this function.

3.2.8 PC Health Status

```
Phoenix - AwardBIOS CMOS Setup Utility
Power Management Setup

× ACPI Function              Enabled          Item Help
  Power Management           [ACPI]
                                              Menu Level  ▶
        ** PM Timers **
× Standby Mode               Disabled
× Suspend Mode               Disabled

  MODEM Use IRQ              [N/A]
  Soft-Off by PWR-BTTN       [Instant-Off]
  Power-On by Alarm          [Disabled]
× Time (hh:mm:ss) Alarm        0
×                              0
×                              0      :
▶ IRQ Wakeup Events          [Press Enter]
  PWRON After PWR-Fail       [Off]
  WDT Time-out Value Unit    [Minutes]
  WDT Time-out Value         [00]

↑↓→←:Move  Enter:Select  +/-/PU/PD:Value  F10:Save  ESC:Exit  F1:General Help
           F5:Previous Values             F7: Optimized Defaults
```

NOTE: *This "PC Health Status" option controls the Thermal, FAN and Voltage status of the board. this page is developed by Chipset independent.*

- **Shutdown Temperature [60°C/70°C]**

  This item enables users to set the limitation of CPU temperature, the range is from 60°C through 70°C.

- **Current System/CPU Temp [Show Only]**

  This item displays current system and CPU temperature.

- **3.3V / 5V / 12V [Show Only]**

  This item displays current CPU and system Voltage.

3.2.9 Load Optimized Defaults

```
Phoenix - AwardBIOS CMOS Setup Utility
Power Management Setup

× ACPI Function              Enabled          Item Help
  Power Management           [ACPI]
                                              Menu Level  ►
        ** PM Timers **
× Standby Mode               Disabled
× Suspend Mode               Disabled

  MODEM Use IRQ              [N/A]
  Soft-Off by PWR-BTTN       [Instant-Off]
  Power-On by Alarm          [Disabled]
× Time (hh:mm:ss) Alarm        0
×                              0
×                              0      :
► IRQ Wakeup Events          [Press Enter]
  PWRON After PWR-Fail       [Off]
  WDT Time-out Value Unit    [Minutes]
  WDT Time-out Value         [00]

↑↓→←:Move  Enter:Select  +/-/PU/PD:Value  F10:Save  ESC:Exit  F1:General Help
           F5:Previous Values             F7: Optimized Defaults
```

NOTE: *Load Optimized Defaults loads the default system values directly from ROM. If the stored record created by the Setup program should ever become corrupted (and therefore unusable). These defaults will load automatically when you turn the PCM-9375 Series system on.*

3.2.10 Set Password

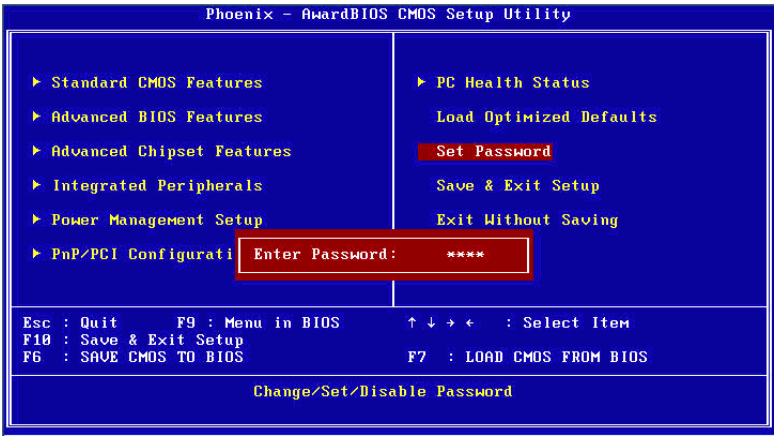

NOTE: To enable this feature, you should first go to the Advanced BIOS Features menu, choose the Security Option, and select either Setup or System, depending on which aspect you want password protected. Setup requires a password only to enter Setup. System requires the password either to enter Setup or to boot the system. A password may be at most 8 characters long.

To Establish Password

1. Choose the Set Password option from the CMOS Setup Utility main menu and press <Enter>.
2. When you see “Enter Password”, enter the desired password and press <Enter>.
3. At the “Confirm Password” prompt, retype the desired password, then press <Enter>.
4. Select Save to CMOS and EXIT, type <Y>, then <Enter>.

To Change Password

1. Choose the Set Password option from the CMOS Setup Utility main menu and press <Enter>.
2. When you see “Enter Password”, enter the existing password and press <Enter>.
3. You will see “Confirm Password”. Type it again, and press <Enter>.

4. Select Set Password again, and at the “Enter Password” prompt, enter the new password and press <Enter>.
5. At the “Confirm Password” prompt, retype the new password, and press <Enter>.
6. Select Save to CMOS and EXIT, type <Y>, then <Enter>.

To Disable Password

1. Choose the Set Password option from the CMOS Setup Utility main menu and press <Enter>.
2. When you see “Enter Password”, enter the existing password and press <Enter>.
3. You will see “Confirm Password”. Type it again, and press <Enter>.
4. Select Set Password again, and at the “Enter Password” prompt, please don’t enter anything; just press <Enter>.
5. At the “Confirm Password” prompt, again, don’t type in anything; just press <Enter>.
6. Select Save to CMOS and EXIT, type <Y>, then <Enter>.

3.2.11 Save & Exit Setup

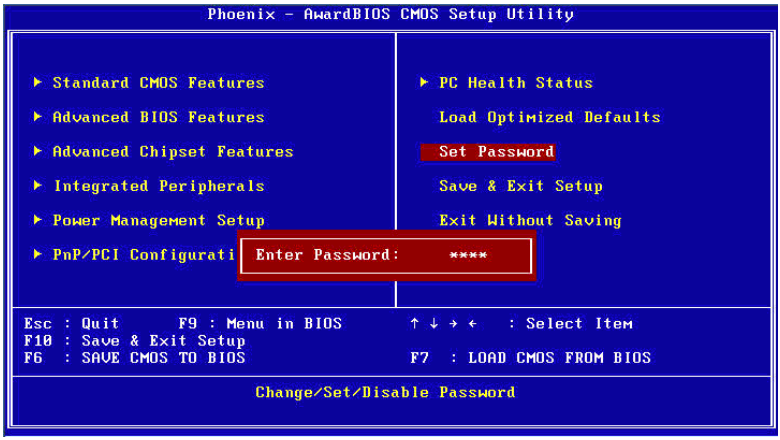

NOTE:

Type "Y" will quit the BIOS Setup Utility and save user setup value to CMOS.

Type "N" will return to BIOS Setup Utility.

3.2.12 Quit Without Saving

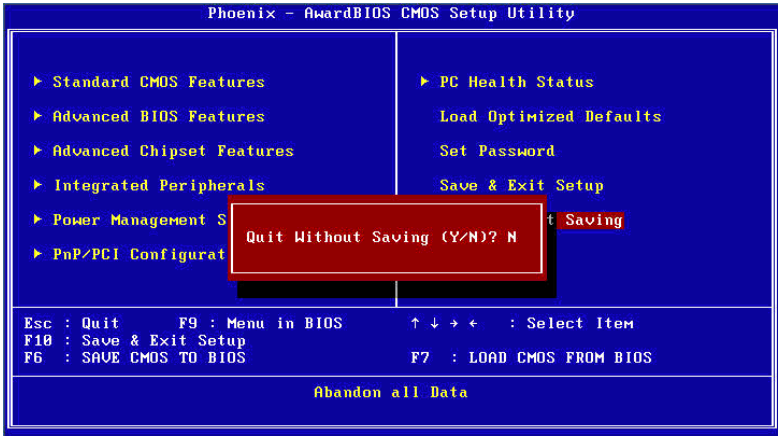

NOTE:

Type "Y"will quit the BIOS Setup Utility without saving to CMOS.

Type "N" will return to BIOS Setup Utility.

CHAPTER 4

PCI SVGA/LCD Setup

This chapter details the software configuration information. It shows you how to configure the card to match your application requirements. The AWARD System BIOS is covered in Chapter 4.

Sections include:

- Installation of SVGA drivers
  - for Window XP
- Connections for standard LCDs
- Further information

Chapter 4 PCI SVGA/LCD Setup

4.1 Introduction

PCM-9375 has an onboard AMD Geode LX800 chipset for its AGP/ SVGA controller. It supports TFT LCD displays and conventional analog CRT monitors with 64 MB frame buffer shared with system memory. The VGA controller can drive CRT displays with resolutions up to 1600 x 1200 x 16 bpp at 100 Hz and up to 1024 x 768 x 32 bpp at 60 Hz for TFT LCD.

4.1.1 Display type

The board can be set in one of three configurations: on a CRT, on a flat panel display, or dual simultaneous display. The system is initially set to dual display mode. If you want to enable the CRT display only or the flat panel display only, please set them up from the BIOS screen.

4.1.2 Dual Simultaneous Display

The board uses an AMD LX800 controller that is capable of providing multiple views and simultaneous display with mixed video and graphics on a flat panel and CRT. The Dual display can be set up by CMOS setting.

4.1.3 CMOS setting for panel type

The board system BIOS and custom drivers are located in a 512 KB, Flash ROM device. A single Flash chip holds the system BIOS, VGA BIOS and network Boot ROM image. The display can be configured via CMOS settings, please choose "panel type" from the "Advanced Chipset Features" menu in the CMOS settings.

4.2 Connections to Two Standard LCDs

Connector Table of 12.1" TTL Sharp LQ121S1DG31 800 x 600 5/3.3 V (18 Bit) for PCM-9375 AMD Geode LX.

4.2.1 AMD Geode LX

Table 4.1: Connections to Sharp LQ121S1DG31 / PCM-9375

Sharp LQ121S1DG31		**PCM-9375**	
DF9MA-41P-1V		**DF-13 4OP-1.25V**	
Pin	**Function**	**Pin**	**Function**
1	GND	3	GND
2	CK	35	DOTCLK
3	GND	4	GND
4	Hsync	38	HS
5	Vsync	36	VS
6	GND		
7	GND		
8	GND	8	GND
9	R0	27	D18
10	R1	28	D19
11	R2	29	D20
12	GND		
13	R3	30	D21
14	R4	31	D22
15	R5	32	D23
16	GND		
17	GND		
18	GND		
19	G0	19	D10
20	G1	20	D11
21	G2	21	D12
22	GND		
23	G3	22	D13
24	G4	23	D14

Table 4.1: Connections to Sharp LQ121S1DG31 / PCM-9375			
25	G5	24	D15
26	GND	33	GND
27	GND		
28	GND	33	GND
29	B0	11	D2
30	B1	12	D3
31	B2	13	D4
32	GND	34	GND
33	B3	14	D5
34	B4	15	D6
35	B5	16	D7
36	GND	34	GND
37	ENAB	37	DE
38	NC		
39	VCC	5	+3.3 V
40	VCC	6	+3.3 V
41	NC		

* The polarity of both synchronous signals are negative.

4.3 Installation of the VGA and AES Driver

Complete the following steps to install the VGA and AES driver. Follow the procedures in the flow chart that apply to the operating system that you are using within your board.

Notes:

1. The windows illustrations in this chapter are intended as examples only. Please follow the listed steps, and pay attention to the instructions which appear on your screen.

2. For convenience, the CD-ROM drive is designated as "D" throughout this chapter.

4.3.1 Installation chipset AES driver

1. Open device manager, right click on entertainment then, click on properties

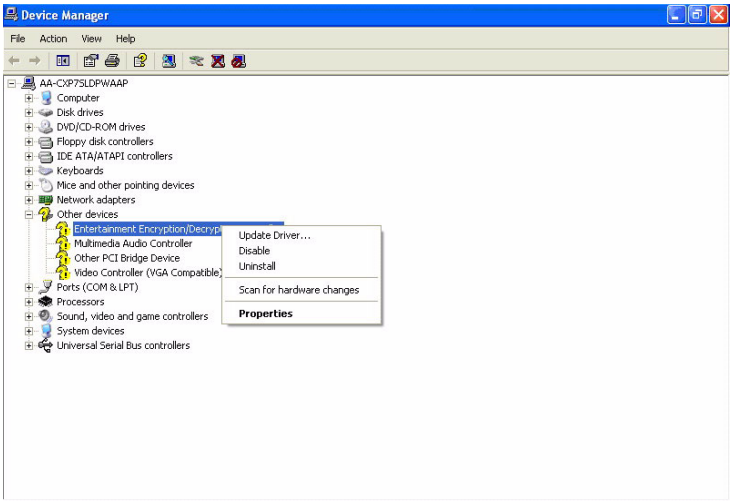

2. Go to driver page and click on update driver.

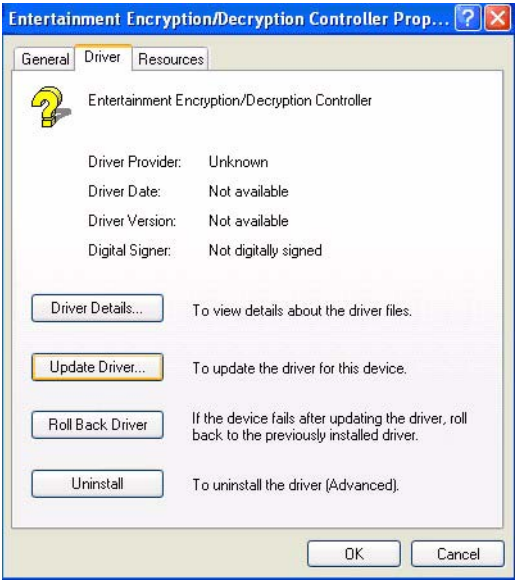

3. Click on install from specific folder and click on next.

4.Click on browse and select target folder, then, click OK.

5.Click on next.

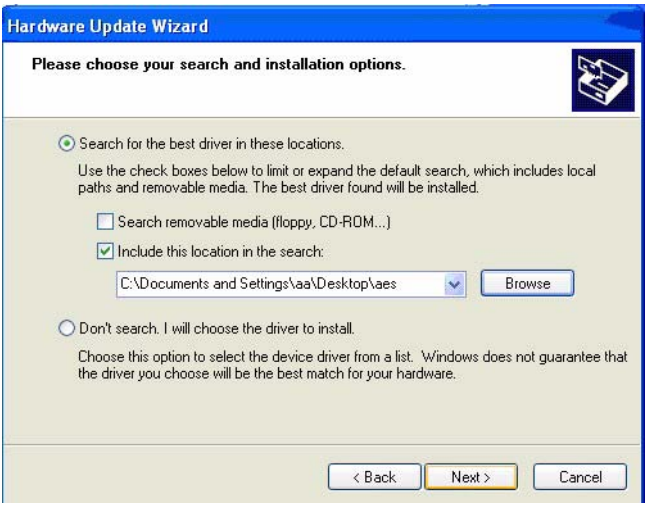

6. Click on finish.

4.3.2 Installation of VGA driver

1. Right click on video, and click “ Properties”.

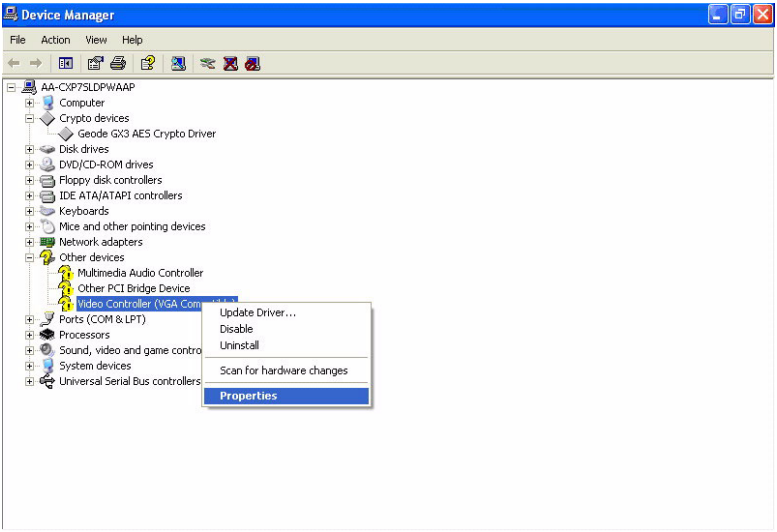

2. Go to driver page and click on update driver.

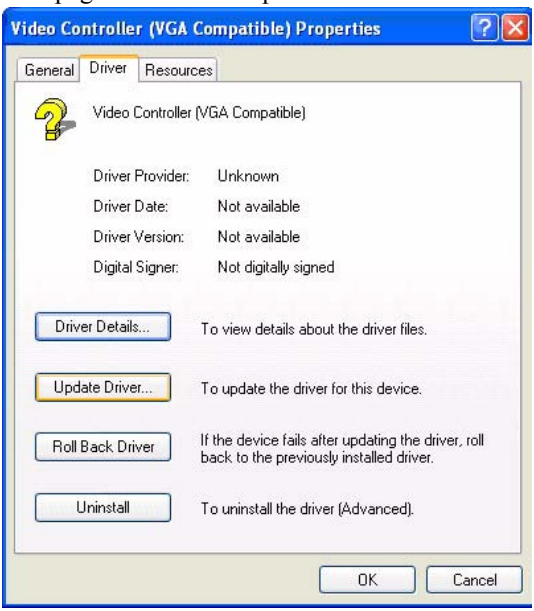

3. Click on install from specific folder and click on next.

4. Click on browse and select target folder, then click OK.

5. Click on next, then click on finish.

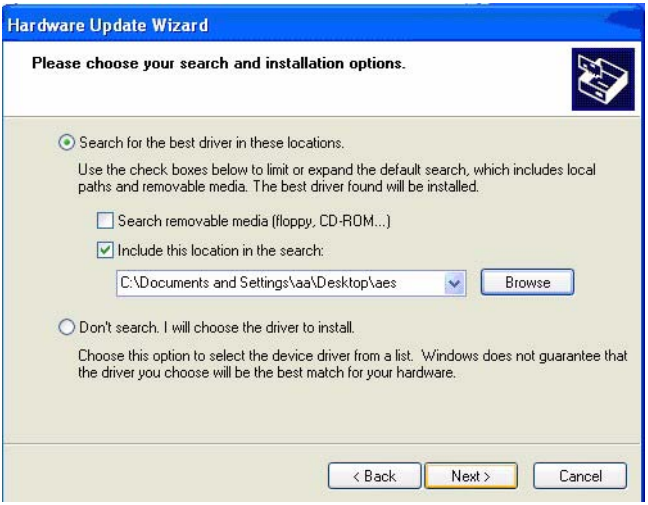

6. Then click on continue anyway.

7. Click on finish.

4.3.3 PCI Bridge

The system may detect the PCI bridge automatically. If the question mark is shown on device manager, please install the driver as below:

1. Click “Add Hardware Wizard” and add new hardware wizard

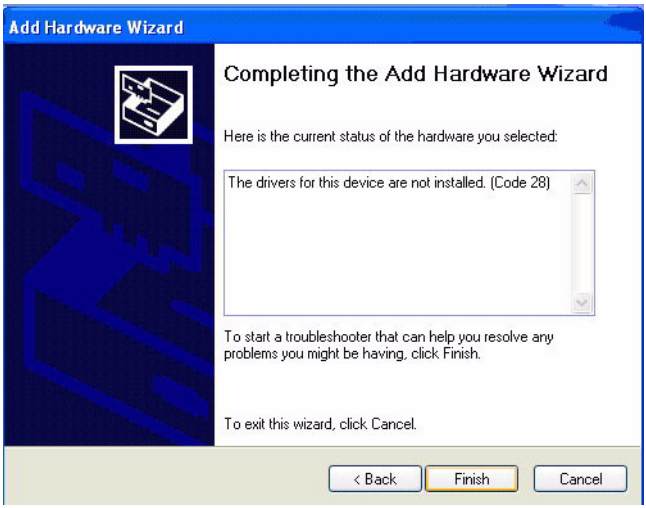

2. Search the right directory of PCI bridge for IT8888G driver.

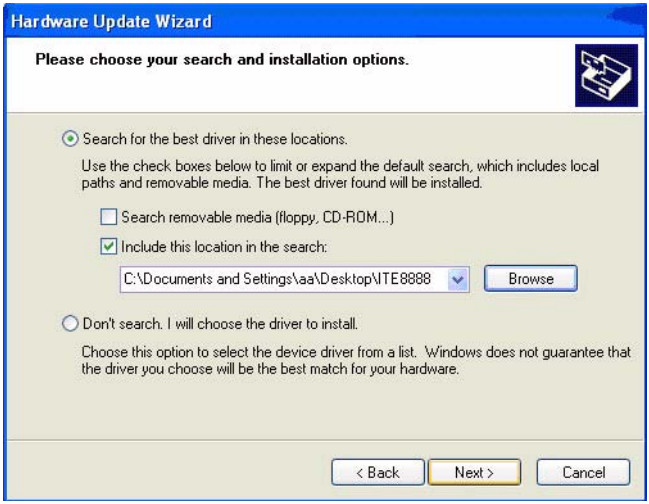

3. Installation finished.

4.4 Further Information

For further information about the AGP/VGA installation of your PCM-9375, including driver updates, troubleshooting guides and FAQ lists, visit the following our website.

CHAPTER 5

Audio Setup

The board is equipped with an audio interface that records and plays back CD-quality audio. This chapter provides instructions for installing the software drivers included on the audio driver diskettes.

Chapter 5 Audio Setup

5.1 Introduction

The onboard audio interface provides high-quality stereo sound by using the Realtek ALC203 audio controller. The audio interface can record, compress, and play back voice, sound and music with built-in mixer control.

5.2 Driver installation

5.2.1 Before you begin

Please read the instructions in this chapter carefully before you attempt installation. The audio drivers for the board are located on the audio driver CD. Run the supplied SETUP program to install the drivers; don't copy the files manually.

Notes: *The files on the software installation diskette are compressed. Do not attempt to install the drivers by copying the files manually. You must use the supplied SETUP program to install the drivers.*

5.2.2 Windows XP drivers

1. Open device manager, right click on audio and click on “properties”.

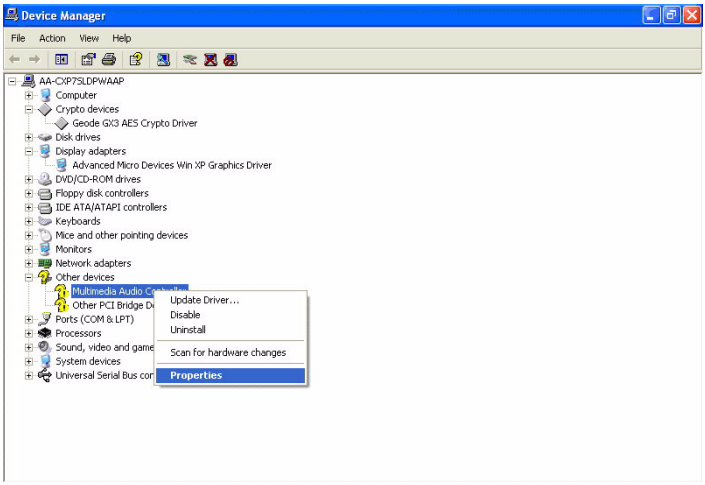

2. Go to driver page and click on update driver.

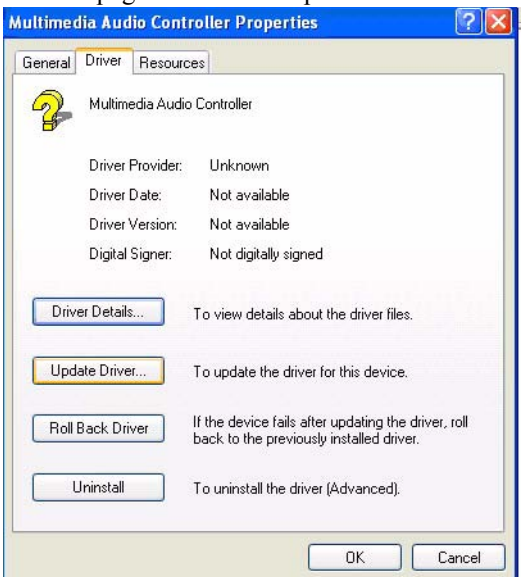

3. Click on install from specific folder and click on next.

4. Click on browse and select target folder, then click OK.

5. Click on next.

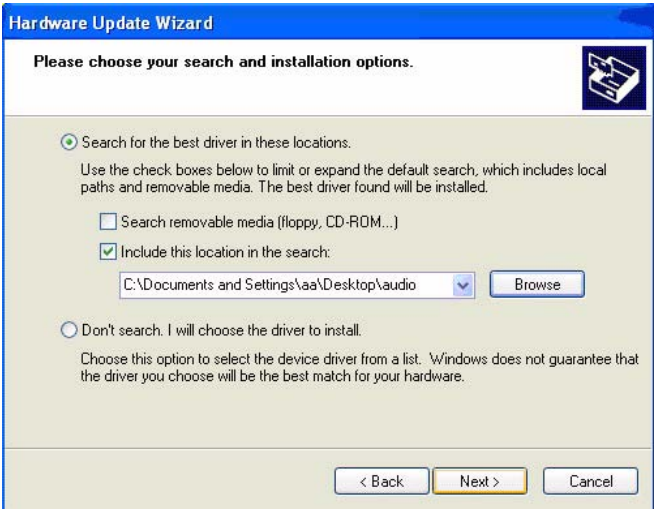

6. Click on continue anyway.

7. Click on finish.

Notes: *The Audio driver is provided by AMD, do not download other audio drivers from Realtek website.*

Appendix A

Pin Assignments

This appendix contains information of a detailed or specialized nature. It includes:

- Stand-by Power Input
- Power Input
- Reset Button
- TFT LCD/LVDS
- Inverter Power
- ATX Power Button
- GPIO
- CF
- IDE
- CRT
- USB1/2, USB3/4
- COM2/3/4
- Print Port
- RS-422/485
- COM1
- ISA - 5 V & - 12 V
- Audio
- LAN1/LAN2

Appendix A Pin Assignments

A.1 Stand-by Power Input (CN1)

Table A.1: Stand-by Power Input (CN1)		
Part Number: 1655303020		
Description: Wafer Box 2.0mm 3P180D w/Lock		
Pin	**Pin Name**	**Signal Type**
1	+5 VSB	PWR
2	GND	GND
3	PS	OUT

A.2 Power Input (CN2)

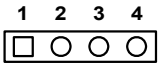

Table A.2: Power Input (CN2)		
Part Number: 1655204030		
Description: Housing 5.08mm 4P 180D Male w/o Lock		
Pin	**Pin Name**	**Signal Type**
1	+12 V	PWR
2	GND	GND
3	GND	GND
4	+5 V	PWR

A.3 Reset Button (CN3)

Table A.3: Reset Button (CN3)		
Part Number: 1601064400		
Description: Push sw L=8.35mm Reset Button for MIC-2340		
Pin	**Pin Name**	**Signal Type**
1	RST	IN
2	GND	GND
3	GND	GND
4	GND	GND

A.4 TFT LCD (CN4)

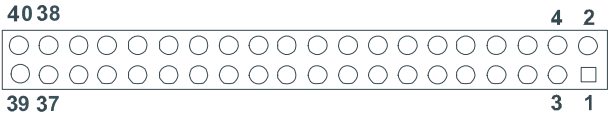

Table A.4: TFT LCD (CN4) (PCM-9375F)		
Part Number: 1653920200		
Description: *CONN. DF13-40DP-1.25 V		
Pin	**Pin Name**	**Signal Type**
1	+5 V	PWR
2	+5 V	PWR
3	GND	GND
4	GND	GND
5	+3.3 V	PWR
6	+3.3 V	PWR
7	TV-CLK	CLK48M
8	GND	GND
9	D0	I/O
10	D1	I/O
11	D2	I/O
12	D3	I/O
13	D4	I/O

Table A.4: TFT LCD (CN4) (PCM-9375F)		
Part Number: 1653920200		
Description: *CONN. DF13-40DP-1.25 V		
Pin	**Pin Name**	**Signal Type**
14	D5	I/O
15	D6	I/O
16	D7	I/O
17	D8	I/O
18	D9	I/O
19	D10	I/O
20	D11	I/O
21	D12	I/O
22	D13	I/O
23	D14	I/O
24	D15	I/O
25	D16	I/O
26	D17	I/O
27	D18	I/O
28	D19	I/O
29	D20	I/O
30	D21	I/O
31	D22	I/O
32	D23	I/O
33	GND	GND
34	GND	GND
35	DOTCLK	CLK
36	VS	OUT
37	DE	I/O
38	HS	OUT
39	RST	OUT
40	FP	OUT

Table A.5: TFT 18-Bit/24-Bit Panel Output Mapping Table (PCM-9375F)

Pin Name	TFT 18-Bit	TFT 24-Bit
DRGB0		B0
DRGB1		B1
DRGB2	B0	B2
DRGB3	B1	B3
DRGB4	B2	B4
DRGB5	B3	B5
DRGB6	B4	B6
DRGB7	B5	B7
DRGB8		G0
DRGB9		G1
DRGB10	G0	G2
DRGB11	G1	G3
DRGB12	G2	G4
DRGB13	G3	G5
DRGB14	G4	G6
DRGB15	G5	G7
DRGB16		R0
DRGB17		R1
DRGB18	R0	R2
DRGB19	R1	R3
DRGB20	R2	R4
DRGB21	R3	R5
DRGB22	R4	R6
DRGB23	R5	R7
DOTCLK	CLK	CLK
HSYNC	HSYNC	HSYNC
VSYNC	VSYNC	VSYNC
LDEMOD	LDE	LDE
VDDEN	ENLVDD	ENLVDD

Table A.6: PCM-9375E-J0A1E pin assignment			
CN4	**LVDS (PCM-9375E-J0A1E)**		
Part Number: 1653910261			
Footprint: SPH10X2			
Description: CONN, SMD 10*2P 180D(M)DF13-20DP-1.25V HRS			
Pin	**Pin Name**	**Signal Type**	**Signal Level**
1	GND	GND	
2	GND	GND	
3	LVDS0-D0+	I/O	LVDS
4	LVDS1-D0+	I/O	LVDS
5	LVDS0-D0-	I/O	LVDS
6	LVDS1-D0-	I/O	LVDS
7	LVDS0-D1+	I/O	LVDS
8	LVDS1-D1+	I/O	LVDS
9	LVDS0-D1-	I/O	LVDS
10	LVDS1-D1-	I/O	LVDS
11	LVDS0-D2+	I/O	LVDS
12	LVDS1-D2+	I/O	LVDS
13	LVDS0-D2-	I/O	LVDS
14	LVDS1-D2-	I/O	LVDS
15	LVDS0-CLK+	I/O	LVDS
16	LVDS1-CLK+	I/O	LVDS
17	LVDS0-CLK-	I/O	LVDS
18	LVDS1-CLK-	I/O	LVDS
19	V-LCD	PWR	+5 Vor+3.3 V
20	V-LCD	PWR	+5 Vor+3.3 V

A.5 Inverter Power (CN5)

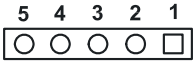

Table A.7: Inverter Power (CN5)			
Part Number: 1655305020			
Description: Wafer box 2.0mm 5P 180D Male w/Lock			
Pin	**Pin Name**	**Signal Type**	**Signal Level**
1	+12 V	PWR	+12 V
2	GND	GND	
3	ENABKL	OUT	+3.3 V
4	VBR	OD	+3.3 V
5	+5 V	PWR	+5 V

A.6 ATX Power Button (CN8)

Table A.8: ATX Power Button (CN8)		
Part Number: 1655302020		
Description: Wafer Box 2P 180D 2.0mmm Male w/Lock		
Pin	**Pin Name**	**Signal Type**
1	PWRBTN#	IN
2	GND	GND

A.7 GPIO (CN9)

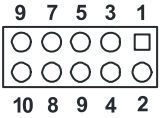

Table A.9: GPIO (CN9)		
Part Number: 1653005261		
Description: Pin Header SMD 5*2P 180D(M) 2.0mm		
Pin	**Pin Name**	**Signal Type**
1	+5 V	PWR
2	GPIO4	I/O
3	GPIO0	I/O
4	GPIO5	I/O
5	GPIO1	I/O
6	GPIO6	I/O
7	GPIO2	I/O
8	GPIO7	I/O
9	GPIO3	I/O
10	GND	GND

A.8 CF (CN10)

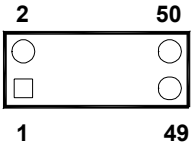

Table A.10: CF (CN10)		
Part Number: 1653025211		
Description: Header for CF Type I 50P 90D(M) Standoff 2.0mm		
Pin	**Pin Name**	**Signal Type**
1	GND	GND
2	D3	I/O
3	D4	I/O
4	D5	I/O
5	D6	I/O
6	D7	I/O
7	CS#1	OUT
8	A10	OUT
9	OE#	OUT
10	A9	OUT
11	A8	OUT
12	A7	OUT
13	+5 V	PWR
14	A6	IN
15	A5	IN
16	A4	IN
17	A3	IN
18	A2	IN
19	A1	IN
20	A0	IN
21	D0	I/O
22	D1	I/O

Table A.10: CF (CN10)		
Part Number: 1653025211		
Description: Header for CF Type I 50P 90D(M) Standoff 2.0mm		
Pin	**Pin Name**	**Signal Type**
23	D2	I/O
24	IOCS16#	IN
25	CF	IN
26	CF	IN
27	D11	I/O
28	D12	I/O
29	D13	I/O
30	D14	I/O
31	D15	I/O
32	CS#3	OUT
33	NC	
34	IOR#	OUT
35	IOW#	OUT
36	WE#	OUT
37	IRQ15	IN
38	+5 V	PWR
39	CF	OUT
40	NC	
41	RST#	OUT
42	IORDY	OUT
43	DREQ	OUT
44	DACK#	OUT
45	CF	I/O
46	CF	IN
47	D8	I/O
48	D9	I/O
49	D10	I/O
50	GND	GND

A.9 IDE (CN11)

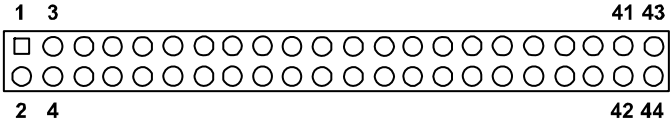

Table A.11: IDE (CN11)		
Part Number: 1653222262		
Description: Box Header SMD 22*2P 180D(M) 2.0mm		
Pin	**Pin Name**	**Signal Type**
1	RST#	OUT
2	GND	GND
3	D7	I/O
4	D8	I/O
5	D6	I/O
6	D9	I/O
7	D5	I/O
8	D10	I/O
9	D4	I/O
10	D11	I/O
11	D3	I/O
12	D12	I/O
13	D2	I/O
14	D13	I/O
15	D1	I/O
16	D14	I/O
17	D0	I/O
18	D15	I/O
19	GND	GND
21	DREQ	OUT
22	GND	GND
23	IOW#	OUT
24	GND	GND

Table A.11: IDE (CN11)		
Part Number: 1653222262		
Description: Box Header SMD 22*2P 180D(M) 2.0mm		
Pin	**Pin Name**	**Signal Type**
25	IOR#	OUT
26	GND	GND
27	IORDY	OUT
28	CSEL#	OUT
29	DACK#	OUT
30	GND	GND
31	IRO14	IN
32	NC	
33	A1	IN
34	D66DET#	IN
35	A0	IN
36	A2	IN
37	CS#1	OUT
38	CS#3	OUT
39	ASP#	OUT
40	GND	GND
41	+5 V	PWR
42	+5 V	PWR
43	GND	GND
44	NC	

A.10 CRT (CN12)

Table A.12: CRT (CN12)		
Part Number: 1654515304		
Description: D-SUB CONN. 15P 90D(F) DIP 5mm Blue		
Pin	**Pin Name**	**Signal Type**
1	R	OUT
2	G	OUT
3	B	OUT
4	NC	
5	GND	GND
6	GND	GND
7	GND	GND
8	GND	GND
9	+5 V	PWR
10	GND	GND
11	NC	
12	DDAT	OD I/O
13	HSYNC	OUT
14	VSYNC	OUT
15	DCLK	OD I/O

A.11 USB1/2 (CN13), USB3/4 (CN15)

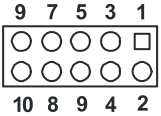

Table A.13: USB1/2 (CN13), USB3/4 (CN15)

Part Number: 1653005260

Description: Pin Header 5*2P 180D(M) 2.0mm SMD

Pin	Pin Name	Signal Type
1	+5 V	PWR
2	+5 V	PWR
3	P0-	I/O
4	P1-	I/O
5	P0+	I/O
6	P1+	I/O
7	GND	GND
8	GND	GND
9	GND	GND
10	NC	

A.12 COM2/3/4 (CN16)

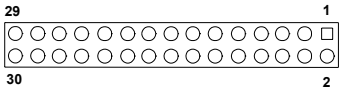

Table A.14: COM2/3/4 (CN16)

Part Number: 1653000221

Pin	Pin Name	Signal Type
1	DCD#2	IN
2	DSR#2	IN
3	RXD#2	IN
4	RTS2	IN
5	TXD2	OUT
6	CTS#2	IN
7	DTR#2	I/O
8	RI#2	IN
9	GND	GND
10	GND	GND
11	DCD#3	IN
12	DSR#3	IN
13	RXD3	IN
14	RTS#3	I/O
15	TXD3	OUT
16	CTS#3	IN
17	DTR#3	I/O
18	RI#3	IN
19	GND	GND
20	GND	GND
21	DCD#4	IN
22	DSR#4	IN
23	RXD4	IN
24	RTS#4	I/O
25	TXD4	OUT

Table A.14: COM2/3/4 (CN16)		
Part Number: 1653000221		
Pin	**Pin Name**	**Signal Type**
26	CTS#4	IN
27	DTR#4	I/O
28	RI#4	IN
29	GND	GND
30	GND	GND

A.13 Print Port (CN17)

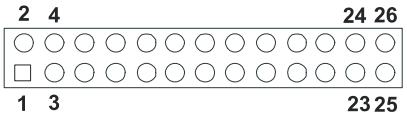

Table A.15: Print Port (CN17)

Part Number: 1653000272

Description: Box Header SMD 13*2P 180D(M) 2.0mm

Pin	Pin Name	Signal Type
1	STB#	OUT
2	AFD#	OUT
3	PD0	I/O
4	ERR#	IN
5	PD1	I/O
6	INIT#	OUT
7	PD2	I/O
8	SLIN#	OUT
9	PD3	I/O
10	GND	GND
11	PD4	I/O
12	GND	GND
13	PD5	I/O
14	GND	GND
15	PD6	I/O
16	GND	GND
17	PD7	I/O
18	GND	GND
19	ACK#	IN
20	GND	GND
21	BUSY	IN
22	GND	GND
23	PE	IN
24	GND	GND

Table A.15: Print Port (CN17)		
Part Number: 1653000272		
Description: Box Header SMD 13*2P 180D(M) 2.0mm		
Pin	**Pin Name**	**Signal Type**
25	SLCT	IN
26	NC	

A.14 RS-422/485 (CN18)

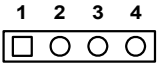

Table A.16: RS-422/485 (CN18)		
Part Number: 1653004101		
Description: Pin Header 4*1P 180D(M) SQUARE 2.0mm		
Pin	**Pin Name**	**Signal Type**
1	422-RXD-	IN
2	422-RXD+	IN
3	485-422-TXD+	OUT
4	485-422-TXD-	OUT

A.15 COM1 (CN19)

Table A.17: COM1 (CN19)		
Part Number: 1654409108		
Description: D-SUB CONN 9P 90D(M) DIP 5mm GRN 225A-09MSPBBB6		
Pin	**Pin Name**	**Signal Type**
1	DCD#	IN
2	RXD#	IN
3	TXD#	OUT
4	DTR#	I/O
5	GND	GND
6	DSR#	IN
7	RTS#	I/O
8	CTS#	IN
9	RI#	IN
10	GND	GND
11	GND	GND

A.16 ISA -5 V & -12 V Input (CN21)

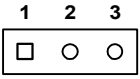

Table A.18: ISA -5 V & -12 V Input (CN21)

Part Number: 1653003101

Description: Pin Header 3*1P 180D(M) SQUARE 2.0mm

Pin	Pin Name	Signal Type
1	-12 V	PWR
2	-5 V	PWR
3	GND	GND

A.17 Audio (CN22)

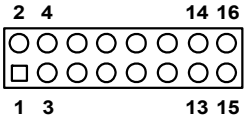

Table A.19: Audio (CN22)

Part Number: 1653008260

Description: Pin Header 8*2P 180D SMD Male SQUARE PIN 2.0mm

Pin	Pin Name	Signal Type
1	SPK	OUT
2	SPK	OUT
3	SPK	OUT
4	SPK	OUT
5	LOUT	OUT
6	LOUT	OUT
7	GND	GND
8	GND	GND
9	LIN	IN
10	LIN	IN
11	GND	GND
12	GND	GND
13	NC	
14	MIC2	IN
15	MIC1	IN
16	GND	GND

A.18 LAN1 (CN23)

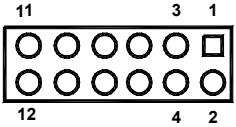

Table A.20: LAN1 (CN23)		
Part Number: 1652508200		
Description: Phone Jack RJ-45 8P 90D(F) DIP 677-088-D06		
Pin	**Pin Name**	**Signal Type**
1	LAN1-TX+	OUT
2	LAN1-TX-	OUT
3	LAN1-RX+	IN
4	LAN1-LCT	I/O
5	LAN1-LCT	I/O
6	LAN1-RX-	IN
7	LAN1-LCT	I/O
8	LAN1-LCT	I/O
11	GND	GND
12	GND	GND

A.19 LAN2 (CN24)

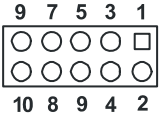

Table A.21: LAN2 (CN24)		
Part Number: 1653205260		
Description: Box Header SMD 5*2 180D (M) 2.0mm		
Pin	**Pin Name**	**Signal Type**
1	+3.3 V	PWR
2	LAN2-ACTLED	IN
3	LAN2-RX+	IN
4	LAN2-RX-	IN
5	LAN2-LILED	IN
6	LAN2-LCT	I/O
7	NC	
8	LAN2-LCT	I/O
9	LAN2-TX+	OUT
10	LAN2-TX-	OUT

Appendix B

System Assignments

This appendix contains information of a detailed nature. It includes:

- System I/O ports
- 1st MB memory map
- DMA channel assignments
- Interrupt assignments

Appendix B System Assignments

B.1 System I/O Ports

Table B.1: System I/O ports

Addr. range (Hex)	Device
000-01F	DMA controller
020-021	Interrupt controller 1, master
040-05F	8254 timer
060-06F	8042 (keyboard controller)
070-071	Real-time clock, non-maskable interrupt (NMI) mask
87-8A	DMA page register
0A0-0A1	Interrupt controller 2
0C0-0DF	DMA controller
1F0-1F8	Fixed disk
278-27F	Reserved (Parallel port 2,LTP3)
2E8-2EF	Reserved (Series port 4)
2F8-2FF	Serial port 2
378-37F	Parallel printer port 1 (LPT 2)
3B0-3BF	Monochrome display and printer adapter (LPT1)
3D0-3DF	Color/graphics monitor adapter
3E8-3EF	Reserved (Series port 3)
3F0-3F7	Diskette controller
3F8-3FF	Serial port 1

B.2 1st MB memory map

Table B.2: 1st MB memory map

Addr. range (Hex)	Device
F0000h - FFFFFh	System ROM
*CC000h - EFFFFh	Unused (reserved for Ethernet ROM)
C0000h - CBFFFh	Expansion ROM (for VGA BIOS)
B8000h - BFFFFh	CGA/EGA/VGA text
B0000h - B7FFFh	Unused
A0000h - AFFFFh	EGA/VGA graphics
00000h - 9FFFFh	Base memory

* If Ethernet boot ROM is disabled (Ethernet ROM occupies about 16 KB)

* E0000 - EFFFF is reserved for BIOS POST

B.3 DMA channel assignments

Table B.3: DMA channel assignments

Channel	Function
0	Available
1	Available (audio)
2	Floppy disk (8-bit transfer)
3	Available (parallel port)
4	Cascade for DMA controller 1
5	Available
6	Available
7	Available

* Audio DMA select 1, 3, or 5

** Parallel port DMA select 1 (LPT2) or 3 (LPT1)

B.4 Interrupt assignments

Table B.4: Interrupt assignments

Interrupt#	Interrupt source
IRQ 0	Interval timer
IRQ 1	Keyboard
IRQ 2	Interrupt from controller 2 (cascade)
IRQ 3	COM2
IRQ 4	COM1
IRQ 5	Reserved (COM4)
IRQ 6	FDD
IRQ 7	LPT1
IRQ 8	RTC
IRQ 9	Reserved (audio)
IRQ 10	Reserved (COM3)
IRQ 11	Reserved
IRQ 12	PS/2 mouse
IRQ 13	INT from co-processor
IRQ 14	Primary IDE

Appendix C

Mechanical Drawings

Appendix C Mechanical Drawings

C.1 Mechanical Drawings

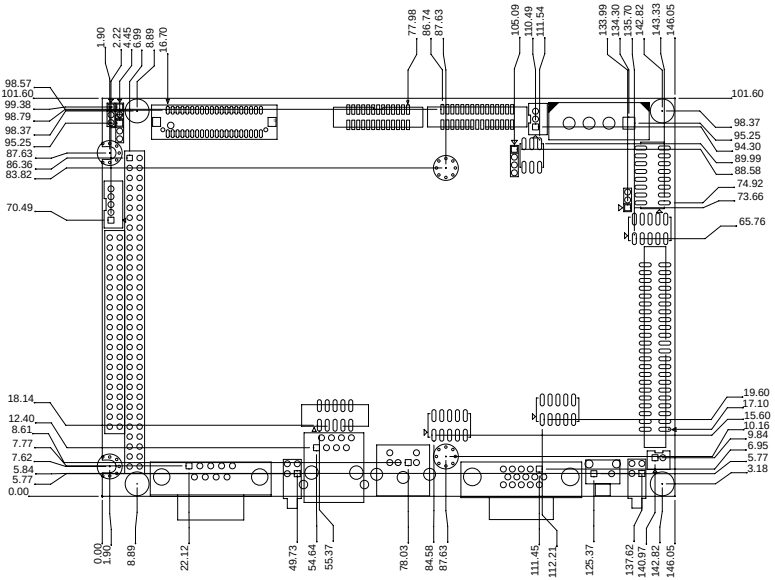

Figure C.1: Dimension of PCM-9375F (TTL)

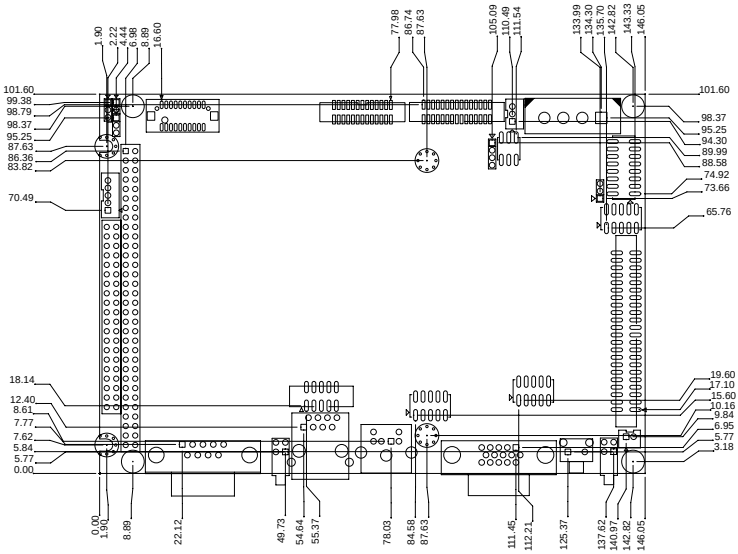

Figure C.2: Dimension of PCM-9375E (LVDS)

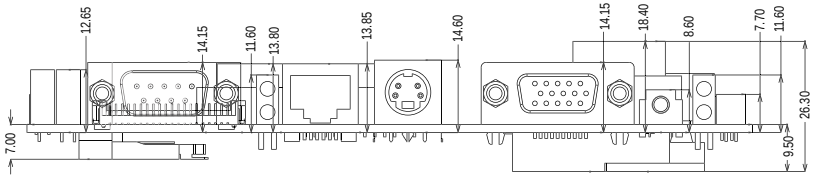

Figure C.3: Dimension of PCM-9375 for H

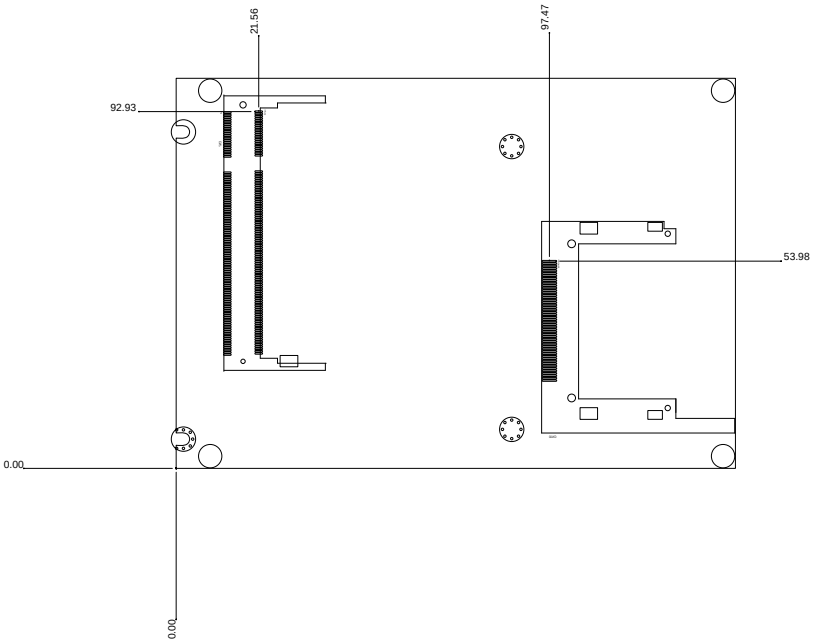

Figure C.4: PCM-9375 Mechanical Drawing(Solder side)

Appendix D

Watchdog Timer

Appendix D Watchdog Timer

```
;The SCH3114 Runtime base I/O address is 800h
;Setting WatchDog time value location at offset 66h
;If set value "0", it is mean disable WatchDog function.
Superio_GPIO_Port = 800h
mov   dx,Superio_GPIO_Port + 66h
mov   al,00h
out   dx,al

.model small
.486p
 .stack 256
.data
SCH3114_IO   EQU   800h
.code
org     100h
.STARTup
;=================================================
=
;47H
;enable WDT function bit [3:2]=11
;=================================================
=

 mov   dx,SCH3114_IO + 47h
mov   al,0ch
out   dx,al

;=================================================
=
;65H
```

```
;bit [1:0]=Reserved
;bit [6:2]Reserve=00000
;bit [7] WDT time-out Value Units Select
;Minutes=0 (default) Seconds=1
;=====================================================

mov   dx,SCH3114_IO + 65h ;
mov   al,080h
out   dx,al

;=====================================================
;66H
;WDT timer time-out value
;bit[7:0]=0~255
;=====================================================

mov   dx,SCH3114_IO + 66h
mov   al,01h
out   dx,al

;=====================================================
;bit[0] status bit R/W
;WD timeout occurred =1
;WD timer counting = 0
;=====================================================

mov   dx,SCH3114_IO + 68h
mov   al,01h
out   dx,al
.exit
END
```

PCM-9375 Watchdog Programming Note

Control IC – SCH3114

I/O base address----------800h

Device Register offset:

GPIO/WDT Selection Register (default = 0x01) ----------47h

- *Bit [0] -> In/Out : don't care*
- *Bit [1]-> Polarity : don't care*
- *Bit [3:2] 11 - WDT; 00 - GPIO; 01 - LED1---------- set to 11*
- *Bit [6:4] -> reserved*
- *Bit [7] Output Type Select -> 1 - Open Drain,0 - Push Pull---------- set to 0*

Watch-dog Timeout Register (default = 0x00) ----------65h

- *Bit [6:0] -> reserved*
- *Bit [7] -> Time out Value Unit Select: 0 - Minute (default), 1 - Second*

Watch-dog Timeout Value Register (default = 0x00) ----------66h

- *Binary coded. Units=minutes (default) or seconds, selectable via Bit[7] of Watch-dog timeout register (0x65)*
- *0x00 -> Time out disable*
- *0x01 -> Time out = 1 minute (second)*

……..

- *0xFF -> Time-out = 255 minutes (second)*

Watch-dog Timer Configuration (default = 0x00)----------67h

- *Bit [0] -> reserved*
- *Bit [1] -> Keyboard Enable:*
  1- WDT is reset upon a keyboard interrupt
  0 - WDT is not affected by keyboard interrupts
- *Bit [2] -> Mouse Enable:*
  1- WDT is reset upon a mouse interrupts.
  0 - WDT is not affected by mouse interrupts.
- *Bit [3] -> reserved*
- *Bit [7:4] -> WDT Interrupt Mapping"*
  1111 = IRQ15
  ……..
  0011 = IRQ3
  0010 = IRQ2 (do not use)
  0001= IRQ1
  0000 = Disable

Watch-dog Timer Control (default = 0x00)----------68h

- *Bit [0] -> Watch-dog Status bit, RW:*
  1 - WD timeout occurred
  0 - WD timer counting
- *Bit [1] -> reserved*
- *Bit [2] -> Force Timeout, W:*
  1 - Force WD timeout event, this bit is self-clearing

- *Bit [3] -> P20 Force Timeout Enable, R/W*
  1 - Allows rising edge of P20, from Keyboard Controller to force the WD timeout event. A WD timeout event may still be forced by setting the force timeout bit – bit 2
  0 - P20 activity dose not generate the WD timeout event
- *Bit [7:4] -> reserved*

Sample code in Assembly Language

```
_PCM-9375 WDTO MAIN   PROC
        ……..

        MOV DX, 847h
        IN AL, DX
        OR AL, 0Ch              ; Set to Watch-dog function
        OUT DX, AL

        MOV DX, 865h
        IN AL, DX
        OR AL, 80h              ; Mode -> second
        OUT DX, AL

        MOV DX, 866h
        MOV AL, ??              ; Set ?? sec
        OUT DX, AL              ; Start WDT
        ……

_PCM-9375 WDTO MAIN   ENDP
        ……..
```