SoM-iMX6U

Embedded System on Module (SoM)

Features

- APM Sleep Mode of 3.5mA
- Freescale/NXP i.MX6 UltraLite (MCIMX6G1)
- Cortex A7 528MHz Processor Speed
- 128MB LP DDR2 RAM
- 4GB eMMC Flash, 16MB Serial Data Flash
- 10/100 Ethernet SPI, I2C, I2S & CAN
- 22x GPIO, 2x USB, 5x Serial Ports, 1x SDIO
- Industrial Temperature -40° to + 85° C

Specifications

Processor	Freescale/NXP i.MX6 UltraLite (MCIMX6G1) Cortex A7
	528 MHz
Memory	128MB of LP DDR2 RAM
	4GB of eMMC Flash
	16MB of Serial Data Flash
IO	22x GPIO (3.3V Lines)
	1x SDIO SD Port
	2x I2S Audio Port with Line In/Out
	1x CAN Port
	1x 10/100 BaseT Ethernet
	1x USB 2.0 High Speed Host Port
	1x USB 2.0 High Speed OTG (Host/Device) Port
	5x Serial Ports (1x with handshake, 4x without handshake)
	1x SPI Port
	2x Timer/Counters/PWM
	Internal Real Time Clock/Calendar (with external battery backup)
	External Reset Button provision and green Status LED
	1x I2C Port
Analog	4x A/D Channels with 12-bit A/D Resolution (0-3.3v)
Bus Expansion	144-pin SODIMM form factor
OS	EMAC OE Linux
Dimensions	2.66" x 1.5"
Power Req.	Typical Running Current 160mA
	APM Sleep Mode of 3.5mA
Environment	-40° to + 85° C Industrial Temperature
	90% Upper Operating Humidity

Block Diagram

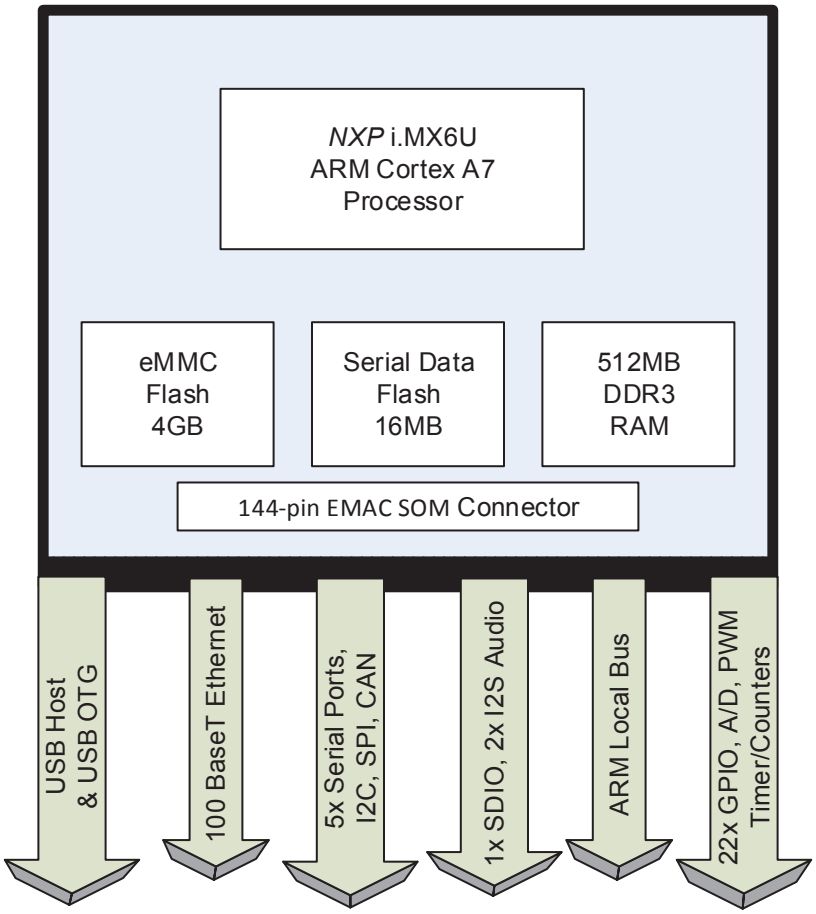

Ordering Information

PRODUCT #	CPU	MEMORY	SERIAL	GPIO	USB	ANALOG	LAN	TEMPERATURE
SOM-iMX6U-120	Freescale ARM Cortex A7 IMX6 UltraLite 528 MHz	128MB LP DDR2 4GB eMMC 16MB Serial Flash	5x	22x	1x HS Host 1x HS OTG	4x 12-bit A/D Channels	1x 100/100 Base T Ethernet	-40° to +85° C

Carrier Board Options

PRODUCT #	DESCRIPTION
SoM-150ES-000	Standard Carrier Board
SoM-150ES-007	Bare-Bones Carrier Board
SoM-150ES-031	Deluxe Carrier with A/D, D/A, Audio
SoM-112ES-100	Standard Carrier Audio
SoM112ES-131	Deluxe Carrier Audio, Wifi, Bluetooth