User's Manual

PPC-150T

DMP Vortex86 DX2 Processor

Compact Panel PC with 15" Touchscreen

SAFETY INFORMATION

- Read these Safety instructions carefully.
- Please carry the unit with both hands, handle carefully.
- Make sure the voltage of the power source is correct before connecting the equipment to the power outlet.
- Do not expose your Panel PC to rain or moisture in order to prevent shock and fire hazard.
- Input voltage rated +12 ~ 24 VDC
- Operating temperature between 0~+50˚C (+32~+122°F).
- Keep PPC-150T away from humidity.
- When a Compact Flash Card or a SATA Slim is the main operating system storage, please turn off power before inserting or removing. Do not open the cabinet to avoid electrical shock. Refer to your nearest dealer for qualified personnel servicing.
- Never touch un-insulated terminals or wire unless your power adaptor is disconnected.
- Locate your Panel PC as close as possible to the socket outline for easy access and to avoid force caused by entangling of your arms with surrounding cables from the Panel PC.
- USB connectors are not supplied with Limited Power Sources.
- If the equipment is not used for a long time, disconnect it from the power source to avoid damage by transient overvoltage.

WARNING!

DO NOT ATTEMPT TO OPEN OR TO DISASSEMBLE THE CHASSIS (ENCASING) OF THIS PRODUCT. PLEASE CONTACT YOUR DEALER FOR SERVICING FROM QUALIFIED TECHNICIAN.

Content

Ch. 1 General Information 1
1.1 Product Description 2
1.2 Product Specifications 3
1.3 Inspection standard for TFT-LCD Panel 5
1.4 Product Dimensions 7
1.5 Mounting Instruction 9
1.6 Ordering Information 11
Ch. 2 System Installation 12
2.1 CPU Board Outline 13
2.2 Connector Summary 14
2.3 Connector Pin Assignments 15
2.4 External I/O Overview 17
2.5 External I/O Pin Assignment 18
2.6 Watchdog Timer 19
Ch. 3 Hardware Installation 20
3.1 Installing the SATA Slim 21
3.2 Installing the Compact Flash 22
Ch. 4 Driver Installation 23
4.1 PPC-150T Development Note 26
4.2 BIOS Default Setting 27
Warranty 28

Ch. 1

General Information

1.1 Product Description

1.2 Product Specifications

1.3 Inspection standard for TFT-LCD Panel

1.4 Product Dimensions

1.5 Mounting Instruction

1.6 Ordering Information

1.1 Product Description

ICOP Technology Inc. is proudly going to release a brand new Panel PC, which offers fanless design, low power consumption, and IP65 front panel. The PPC-150T is powered by DMP's latest Vortex86DX2 SoC, the 3rd generation SoC of Vortex86 family, and dual-channel 1GB DDRII chipset that handles processing more efficiently and provides faster performance. The resistive touch panel with LED backlight TFT LCD increases operation convenience and visibility in outdoor environments. The ultra-compact and thin exterior design is perfect for the present demanding embedded and productive applications.

The new PPC-150T inherited PDX/PMX-series' smooth appearance and ultra-texture aluminum exterior design to make your industrial applications look more stylish. The versatile I/O ports, IP65 front panel, 10/100Mps Ethernet, GIGA high-speed Ethernet, WiFi, etc. can fulfill fundamental functions. Our consistent advantages feature stable performance, extended working temperature support, low power consumption and fanless design. The expandable customize I/O ports can be accommodated connectivity requirements to industrial machine platforms and industrial automation equipment's needs.

The PPC-150T supports Windows Embedded CE, Windows Embedded Standard 2009, Windows Embedded Compact 7, and Linux to meet ready-to-market demand and provide competitive advantages for customers.

1.2 Product Specifications

CPU BOARD SPECIFICATIONS

CPU	DM&P Vortex86DX2 933MHz
Cache	L1:16KB I-Cache, 16KB D-Cache L2: 256KB Cache
BIOS	AMI BIOS
Memory	512MB / 1GB /2GB DDR2 onboard
Watchdog Timer	Software Programmable from 30.5u to 512 seconds x 2 sets
LAN	Integrated 10/100M Ethernet X1 Giga Ethernet (Optional) X1
Audio	HD Audio-Realtek ALC262 CODEC
Internal Drives	Compact Flash Type I / II Slot, SATA SLIM SD Slot (Optional)
I/O	RS-232/422/485 x 2 USB Ports (Ver2.0) x 3 PS/2 KB Audio-Out RJ-45 Port x 1 GIGA Ethernet Port X 1 (Optional)

MECHANICAL & ENVIRONMENT

Power Requirement	+12 ~ 24VDC
Power Consumption	+24VDC@ 0.7A
Operating Temperature	0~+50˚C (+32~+122°F) / -20~+60˚C (-4~+140°F)

Storage Temperature	-30~+70°C (-22~ +158°F)
Operating Humidity	0% ~ 90% Relative Humidity, Non-Condensing
Dimensions	354.85x280.85x55mm (13.97"x8.22"x2.16")
Weight	3.8 Kg
Protection	IP65 Front Panel
Certification	CE / FCC / VCCI / Vibration

LCD SPECIFICATIONS

Display Type	15” XGA TFT LCD
Backlight Unit	LED
Display Resolution	1024(W) x 768(H)
Brightness (cd/m^2)	250/350 nits
Contrast Ratio	700 : 1
Display Color	262,144
Pixel Pitch (mm)	0.297 (H) x 0.297 (V)
Viewing Angle	Vertical 140°, Horizontal 160°
Backlight Lifetime	25,000/50,000 hrs

TOUCHSCREEN

Type	Analog Resistive
Resolution	Continuous
Transmittance	80%
Controller	PS/2 interface
Software Driver	DOS / Linux / Windows Embedded
Durability	1 million

1.3 Inspection standard for TFT-LCD Panel

DEFECT TYPE			LIMIT						Note
VISUAL DEFECT	INTERNAL	SPOT	φ＜0.15mm			Ignore			Note 1
			0.15mm≦φ≦0.5mm			N≦4			
			0.5mm＜φ			N=0			
		FIBER	0.03mm<W≦0.1mm, L≦5mm			N≦3			Note 1
			1.0mm＜W, 1.5mm＜L			N=0			
		POLARIZER BUBBLE	φ＜0.15mm			Ignore			Note 1
			0.15mm≦φ≦0.5mm			N≦2			
			0.5mm＜φ			N=0			
		Mura	It' OK if mura is slight visible through 6%ND filter						
ELECTRICAL DEFECT	BRIGHT DOT		A Grade			B Grade			
			C Area	O Area	Total	C Area	O Area	Total	Note 3
			N≦0	N≦2	N≦2	N≦2	N≦3	N≦5	Note 2
	DARK DOT		N≦2	N≦3	N≦3	N≦3	N≦5	N≦8	
	TOTAL DOT			N≦4		N≦5	N≦6	N≦8	Note 2
	TWO ADJACENT DOT		N≦0	N≦1 pair	N≦1 pair	N≦1 pair	N≦1 pair	N≦1 pair	Note 4
	THREE OR MORE ADJACENT DOT		NOT ALLOWED						
	LINE DEFECT		NOT ALLOWED						

(1) One pixel consists of 3 sub-pixels, including R, G, and B dot. (Sub-pixel = Dot)

(2) Little bright Dot acceptitable under 6% ND-Filter.

(3) If require G0 grand (Total dot N≦0), please contact region sales.

[Note 1] W: Width[mm]; L: Length[mm]; N: Number; φ: Average Diameter.

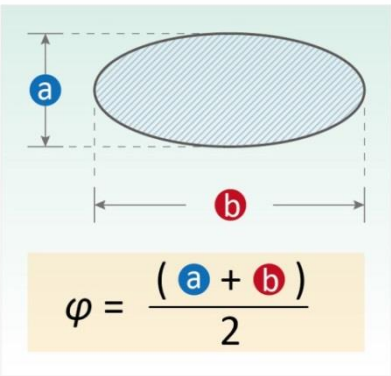

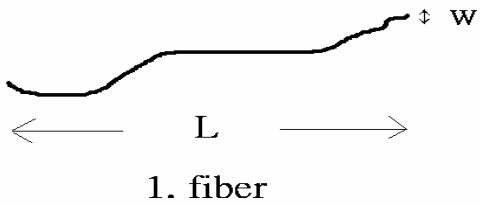

(a) White / Black Spot (b) Polarizer Bubble

[Note 2] Bright dot is defined through 6% transmission ND Filter as following.

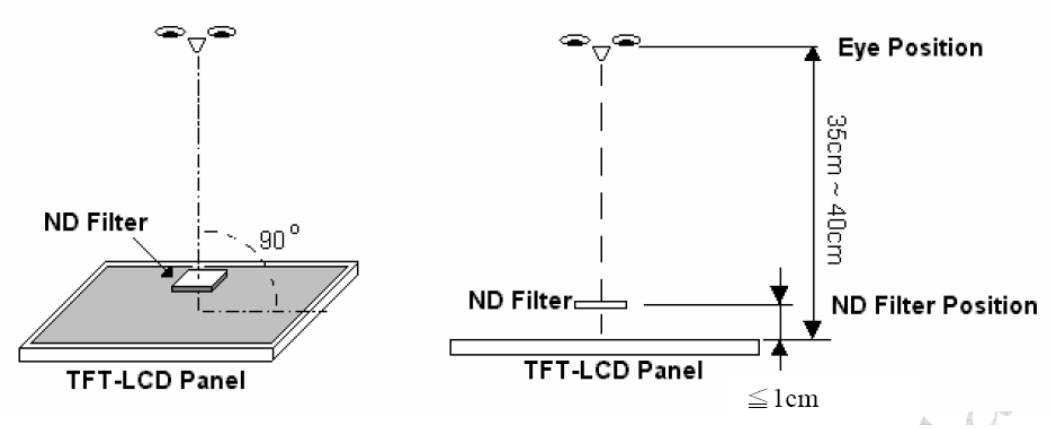

[Note 3] Display area

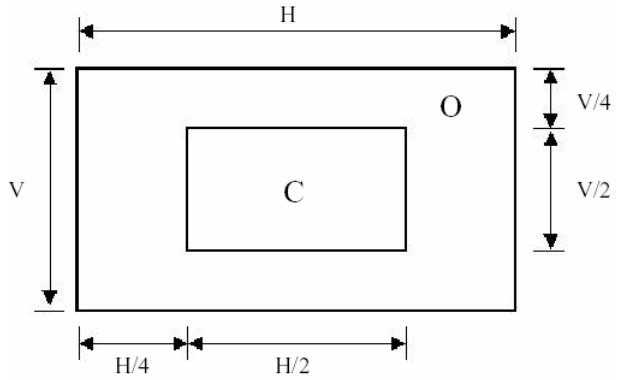

C Area: Center of display area **O Area**: Outer of display area

[Note 4] Judge the defect dot and the adjacent dot as following. Allow below (as A, B, C and D status) adjacent defect dots, including bright and dark adjacent dot. And they will be counted 2 defect dots in total quantity.

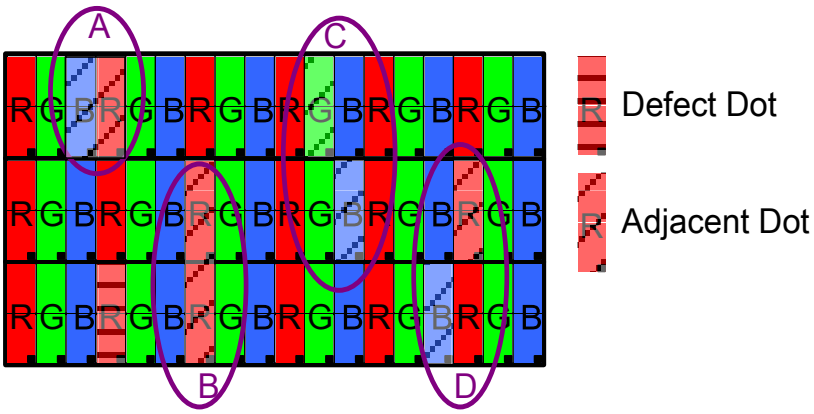

The defects that are not defined above and considered to be problem shall be reviewed and discussed by both parties.

Defects on the Black Matrix, out of Display area, are not considered as a defect or counted.

1.4 Product Dimensions

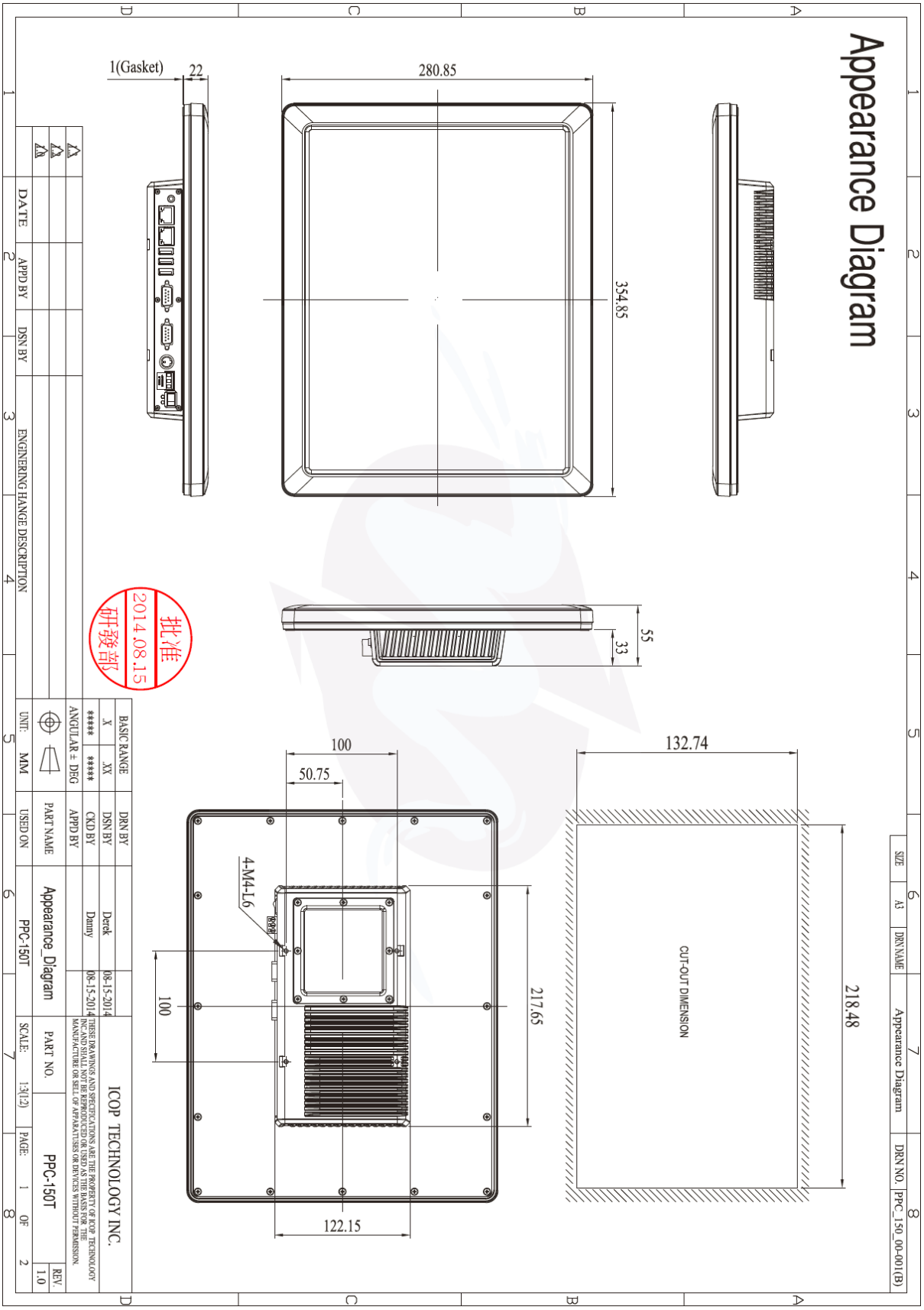

Appearance Diagram

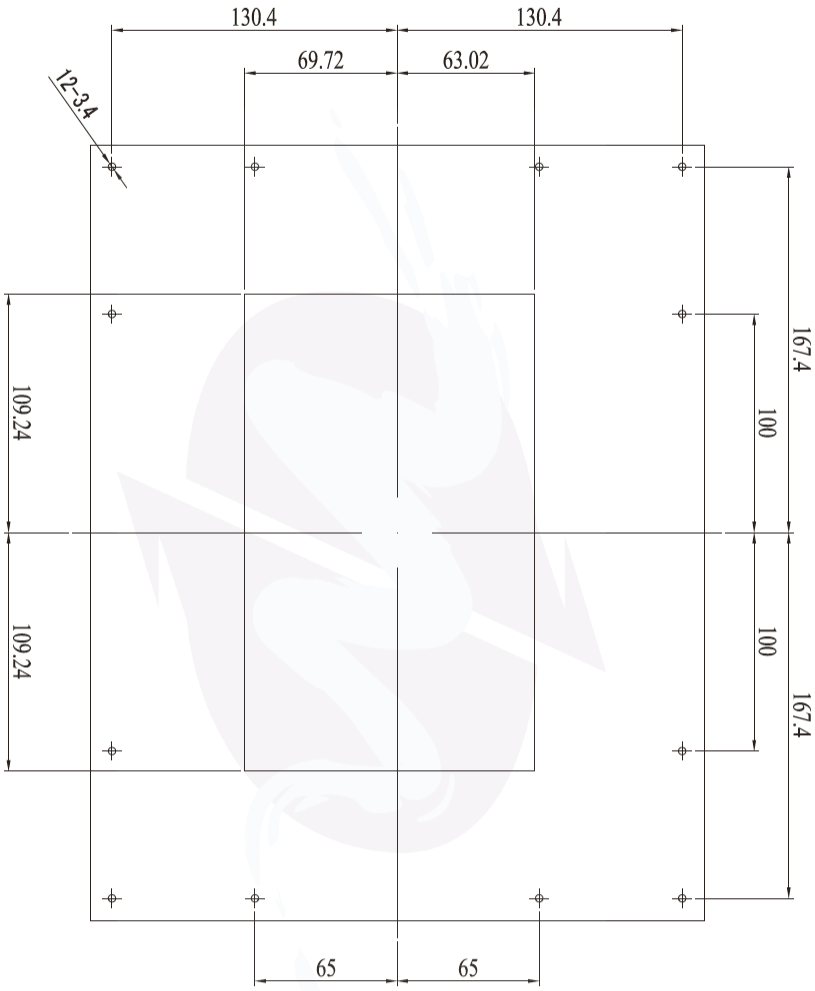

BASIC RANGE	DRN BY		
.X	DSN BY	Derek	08-15-2014
***** .XX *****	CKD BY	Danny	08-15-2014
ANGULAR ± DEG	APPD BY		
PART NAME	Appearance_Diagram		
UNIT: MM	USED ON	PPC-150T	

ICOP TECHNOLOGY INC.

THESE DRAWINGS AND SPECIFICATIONS ARE THE PROPERTY OF ICOP TECHNOLOGY INC. AND SHALL NOT BE REPRODUCED OR SUBJECTED TO THE BASIS FOR THE MANUFACTURE OR SELL OF APPARATUSES OR DEVICES WITHOUT PERMISSION.

PART NO.	PPC-150T		REV. 1.0
SCALE: 1:3(1:2)	PAGE: 2 OF 2		

批准 研發部 2014.08.15

SIZE	DRN NAME		DRN NO.
A3	Appearance Diagram		PPC_150_00-001(B)

1.5 Panel Mounting Instruction

1. Cut a mounting hole in the panel. (Refer to PPC-150T Dimensions on page 11~12.) (Note 1)
2. Check and remove the twelve M3 screws in a diagonal pattern as image below if necessary.
3. Place PPC-150T face-down on a clean, flat surface.
4. Slide the panel cutout around the back of PPC-150T, until the panel rests directly on the gasket. Make sure the screw holes align with the screw holes on PPC-150T.
5. The screw size is M3*L (L=wall thickness + 6.0mm) (Note 2)
6. Insert all twelve M3 screws into the screw holes. (Note 2)
7. Finger-tighten the M3 screws. Finish tightening the M3 screws in a diagonal pattern using an M3 screw driver (see the image as below); maximum torque 1.18Nm (12 kgf-cm).

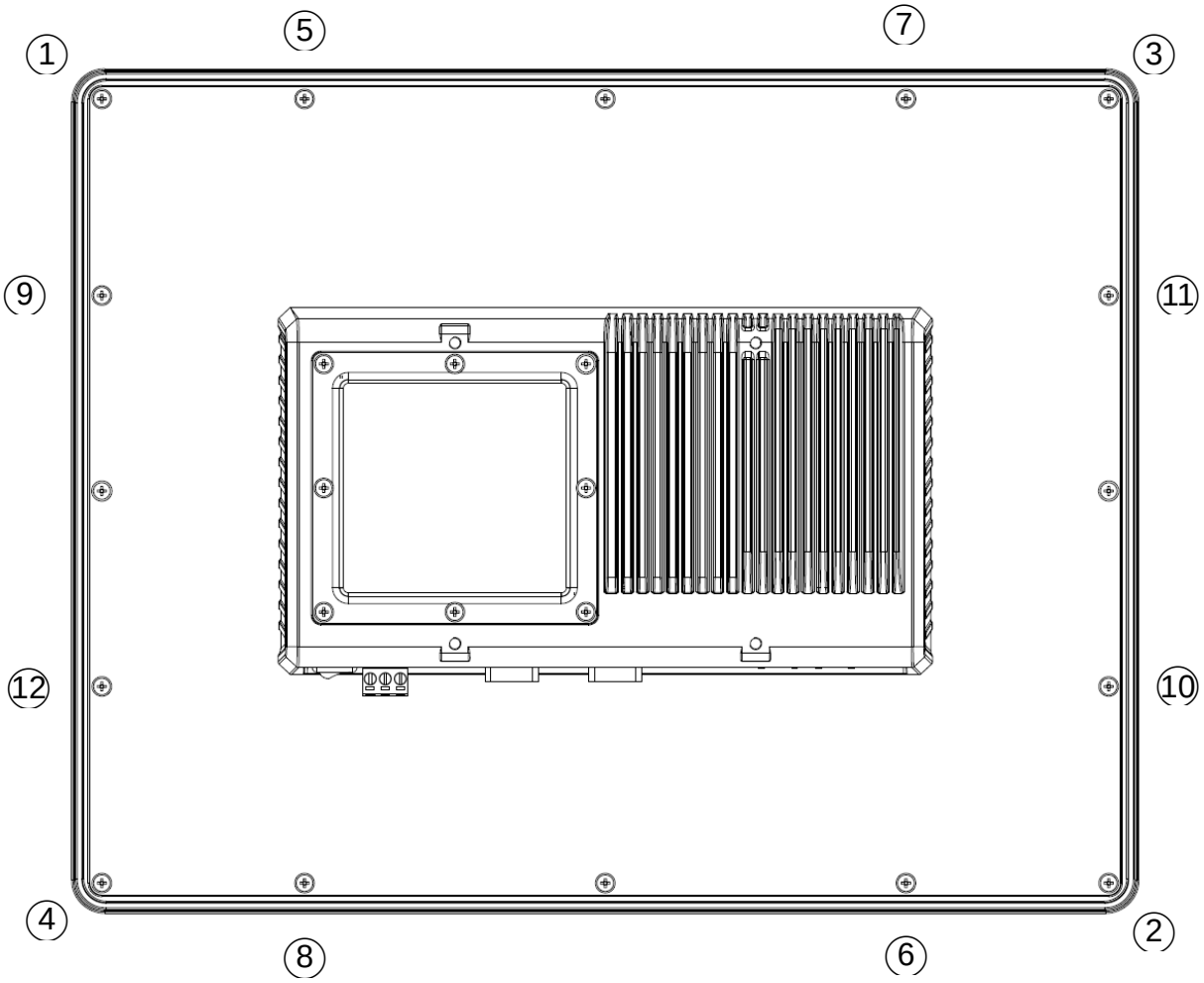

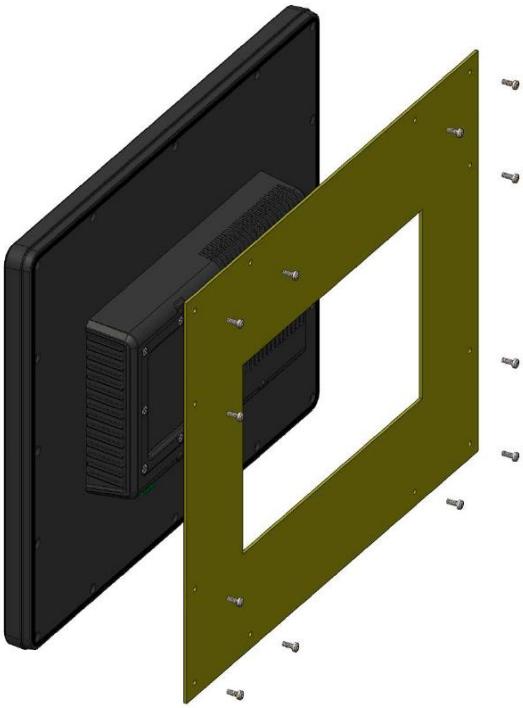

Note 1:

It is strongly recommended that a professional machine shop cut the mounting hole in the panel.

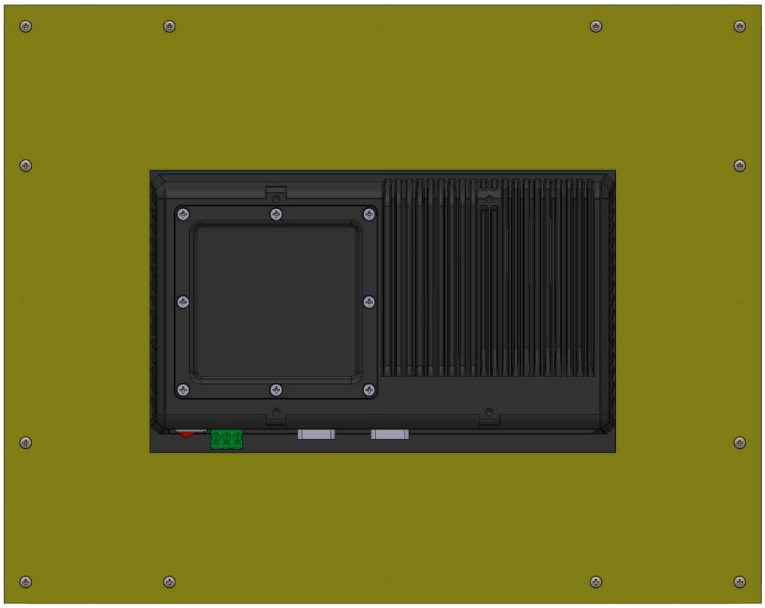

Note 2:

The length for all twelve M3 screws will be according to the thickness of mounting panel. For example: The length of standard M3 screws for PPC-150T is 6mm. If the thickness of your mounting panel is 3mm and washer thickness is 1mm, you have to use 10mm M3 screw.

1.6 Ordering Information

PART NUMBER	DESCRIPTION
PPC-150T-D2N3N	15” Panel PC w/512MB Memory/3U/1A/1L/2S/DC12~24V
PPC-150T-D2N4N	15” Panel PC w/1GB Memory/3U/1A/1L/2S/DC12~24V
PPC-150T-D2N5N	15” Panel PC w/2GB Memory/3U/1A/1L/2S/DC12~24V
PPC-150T-D2N3N -GE	15” Panel PC w/512MB Memory/3U/1A/1L/1GigaL/2S/DC12~24V
PPC-150T-D2N4N -GE	15” Panel PC w/1GB Memory/3U/1A/1L/1GigaL/2S/DC12~24V
PPC-150T-D2N5N -GE	15” Panel PC w/2GB Memory/3U/1A/1L/1GigaL/2S/DC12~24V

PACKING LIST

PART NUMBER	PACKAGE	
PPC-150T-D2N3N	PPC-150T-D2N3N	M4 L8 Screw *4
PPC-150T-D2N4N	PPC-150T-D2N4N	M4 L8 Screw *4
PPC-150T-D2N5N	PPC-150T-D2N5N	M4 L8 Screw *4
PPC-150T-D2N3N -GE	PPC-150T-D2N3N -GE	M4 L8 Screw *4
PPC-150T-D2N4N -GE	PPC-150T-D2N4N -GE	M4 L8 Screw *4
PPC-150T-D2N5N -GE	PPC-150T-D2N5N -GE	M4 L8 Screw *4

Ch. 2

System Installation

2.1 CPU Board Outline

2.2 Connector Summary

2.3 Connector Pin Assignments

2.4 External I/O Overview

2.5 External I/O Pin Assignment

2.6 Watchdog Timer

2.1 CPU Board Outline

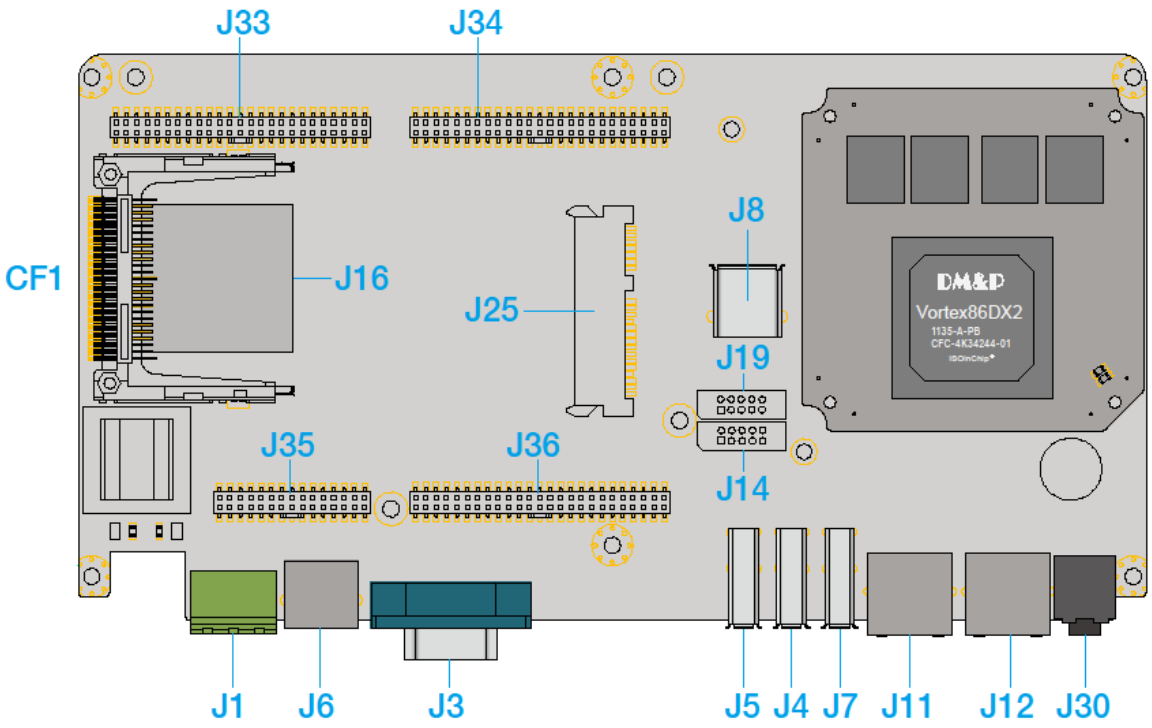

PPC CPU Board

2.2 Connector Summary

No.	Description	Type of Connections	Pin #
J1	Power Terminal Connector	External Power Plug	3-pin
J3	COM (RS232/422/485)	External D-Sub Male Connector	9-pin
J4	USB	External USB Connector	6-pin
J5	USB	External USB Connector	6-pin
J6	PS/2Keyboard	External Mini DIN Socket	6-pin
J7	USB	External USB Connector	6-pin
J8	USB (Wi-Fi Optional)	Internal USB Connector	5-pin
J11	Ethernet	External RJ45 Connector	8-pin
J12	GIGA Ethernet	External RJ45 Connector	8-pin
J14	RS-232-422-485	2.0mm 10-pin box header	10-pin
J16	SD Card Slot (Optional)	Internal SD Card Socket	
J19	RS-232-422-485 (VGA)	2.0mm 10-pin box header	10-pin
J25	SATA Slim Slot	Internal SATA Slim Socket	
J30	Audio Line-Out	1.25mm Phone Jack	2-pin
J33	GPIO-X3	PH2*25F(2.0)-7.5mm/P2N71-2XX	50-pin
J34	GPIO-X1	PH2*25F(2.0)-7.5mm/P2N71-2XX	50-pin
J35	GPIO-X4	PH2*15F(2.0)-7.5mm/P2N71-2XX	30-pin
J36	GPIO-X2	PH2*25F(2.0)-7.5mm/P2N71-2XX	50-pin
CF1	CF Card Socket	CF Type I/II Socket	

2.3 Connector Pin Assignments

J1: Power Terminal Connector

Pin #	Signal Name
1	+12~24V
2	GND
3	FG

J3: COM (RS232/422/485)

Pin #	Signal Name	Pin #	Signal Name
1	DCD1/422TX-/ RS485-	2	RXD1/422TX+ /RS485+
3	TXD1/422RX+	4	DTR1/422RX-
5	GND	6	DSR1
7	RTS1	8	CTS1
9	RI1		

J4: USB

Pin #	Signal Name	Pin #	Signal Name
1	VCC	2	USBD2-
3	USBD2+	4	GND
5	GND	6	GND

J5: USB

Pin #	Signal Name	Pin #	Signal Name
1	VCC	2	USBD3-
3	USBD3+	4	GND
5	GND	6	GND

J7: USB

Pin #	Signal Name	Pin #	Signal Name
1	VCC	2	USBD4-
3	USBD4+	4	GND
5	GND	6	GND

J8: USB (Wi-Fi Optional)

Pin #	Signal Name	Pin #	Signal Name
1	VCC	2	USBD1-
3	USBD1+	4	GND
5	GND		

J6 : PS/2Keyboard

Pin #	Signal Name	Pin #	Signal Name
1	KBCLK	2	MSCLK
3	GND	4	KBDATA
5	MSDATA	6	VCC
7	GND	8	GND
9	GND		

J19: RS-232-422-485

Pin #	Signal Name	Pin #	Signal Name
1	R OUT	2	GND
3	G OUT	4	GND
5	B OUT	6	GND
7	HSYNC	8	GND
9	VSYNCD	10	GND

J33/J34/J35/J36: GPIO 180-pin

J33				J34				J35				J36			
Pin#	Signal Name	Pin#	Signal Name	Pin#	Signal Name	Pin#	Signal Name	Pin#	Signal Name	Pin#	Signal Name	Pin#	Signal Name	Pin#	Signal Name
1	GND	2	GND	1	GND	2	SBHE	1	VCC	2	VCC	1	SA7	2	SA6
3	GP34	4	GP35	3	RSTDRV	4	SD7	3	GND	4	GND	3	IRQ3	4	SA5
5	GP36	6	GP37	5	VCC	6	SD6	5	GP90	6	GP91	5	IRQ10	6	SA4
7	GP40	8	GP41	7	SD8	8	SD5	7	GP92	8	GP93	7	IRQ11	8	SA3
9	GP42	10	GP43	9	SD9	10	SD4	9	GP94	10	GP95	9	IRQ12	10	SA2
11	GP44	12	GP45	11	SD10	12	SD3	11	GP96	12	GP97	11	BALE	12	SA1
13	GP46	14	GP47	13	SD11	14	SD2	13	GPCS0	14	GPCS1	13	OSC	14	SA0
15	GP50	16	GP51	15	SD12	16	SD1	15	GP00	16	GP01	15	GND	16	IQ14
17	GP52	18	GP53	17	SD13	18	SD0	17	GP02	18	GP03	17	GP10	18	GND
19	GP54	20	GP55	19	GND	20	GND	19	GP04	20	GP05	19	GP12	20	GP11
21	GP56	22	GP57	21	SMEMW	22	IOCHRDY	21	GP06	22	GP07	21	GP14	22	GP13
23	GND	24	GND	23	SMEMR	24	AEN	23	RS485+1	24	RS485-1	23	GP16	24	GP15
25	GP60	26	GP61	25	IOW	26	SA19	25	VBATT	26	FGND	25	GP20	26	GP17
27	GP62	28	GP63	27	IOR	28	SA18	27	VIN	28	VIN-	27	GP22	28	GP21
29	GP34	30	GP65	29	SD14	30	SA17	29	VIN	30	VIN-	29	GP24	30	GP23
31	GP66	32	GP57	31	SD15	32	SA16					31	GP26	32	GP25
33	GP70	34	GP71	33	MEMCS16	34	SA15					33	GP30	34	GP27
35	GP72	36	GP73	35	IOCS16	36	SA14					35	GP32	36	GP31
37	GP74	38	GP75	37	REFRESH	38	SA13					37	XPCIRST-	38	GP33
39	GP76	40	GP77	39	GND	40	SA12					39	GND	40	GND
41	GP80	42	GP81	41	SYSCLK	42	SA11					41	XPE0_RX-	42	XPE0_TX-
43	GP82	44	GP83	43	IRQ7	44	SA10					43	XPE0_RX+	44	XPE0_TX+
45	GP84	46	GP85	45	IRQ6	46	SA9					45	GND	46	GND
47	GP86	48	GP87	47	IRQ5	48	SA8					47	XYPE0_CLK-	48	XUSBD3-
49	GND	50	GND	49	IRQ4	50	GND					49	XYPE0_CLK+	50	XUSBD3+

2.4 External I/O Overview

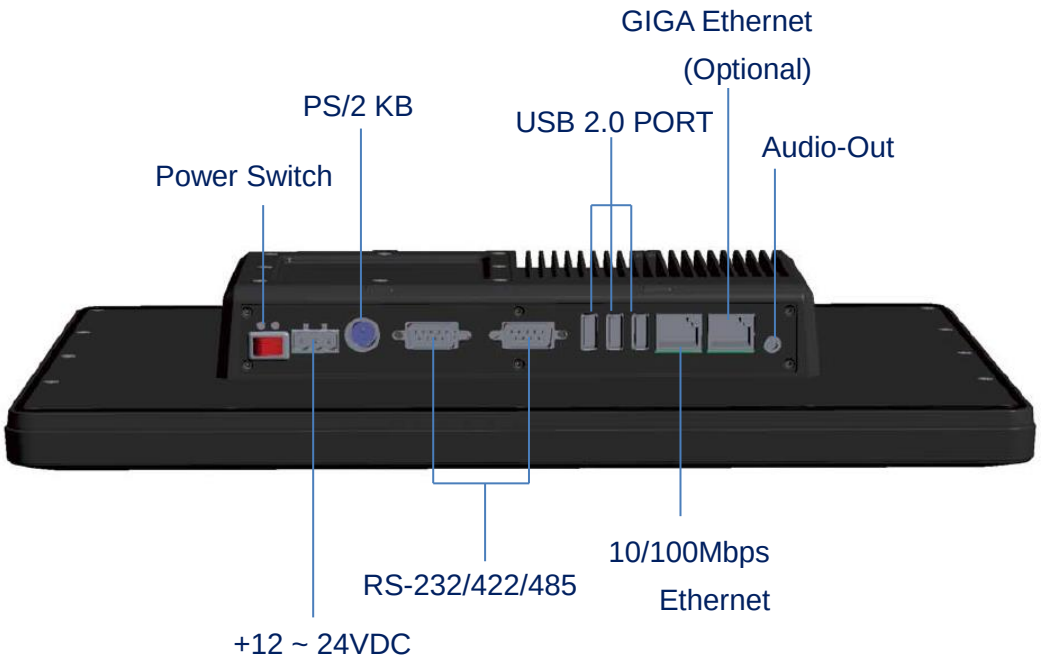

NOTE

1. GIGA LAN, Wireless are optional
2. RS232/422/485 is selected by BIOS setting

2.5 External I/O Pin Assignment

Power Switch

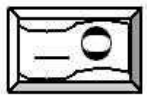

Pin #	Status
|	ON
O	OFF

Power Connector DC-IN 24V

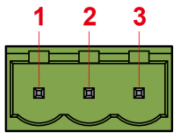

Pin #	Signal Name
1	+12~24V
2	GND
3	FG

PS/2 Keyboard

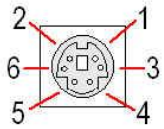

Pin #	Signal Name
1	KBCLK
2	PMCLK
3	GND
4	KBDAT
5	PMDAT
6	SB5V

J3: COM-RS232/422/485 (Change setting by BIOS)

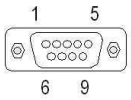

Pin #	Signal Name	Pin #	Signal Name
1	DCD1/422TX-/RS485-	**2**	RXD1/422TX+/RS485+
3	TXD1 / 422RX+	**4**	DTR1 / 422RX-
5	GND	**6**	DSR1
7	RTS1	**8**	CTS1
9	RI1		

J4/J5/J7: USB

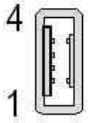

Pin #	Signal Name
1	VCC
2	USB0-
3	USB0+
4	GND
5	GGND
6	GGND

RJ45

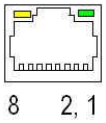

Pin #	Signal Name	Pin #	Signal Name
1	FTXD+	2	FTXD-
3	FRXIN+	4	NC
5	NC	6	FRXIN-
7	NC	8	NC

GIGA Ethernet (Optional)

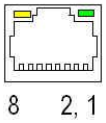

Pin #	Signal Name	Pin #	Signal Name
1	FTXD+	2	FTXD-
3	FRXIN+	4	NC
5	NC	6	FRXIN-
7	NC	8	NC

Audio Line-Out

Pin #	Signal Name
1	GND
2	LOUTL
3	Open Touch
4	Open Touch
5	VREFOUT

2.6 Watchdog Timer

There are two watchdog timers in PPC-150T, we also provide DOS, Linux and WinCE example for your reference.

For more technical support, please visit: http://tech.icop.com.tw or download the PDF file: dmp.com.tw/tech

Ch. 3

Hardware Installation

PPC-150T supports various kinds of storages for industrial application, divided into SATA Slim, CompactFlash or SD card (optional).

3.1 Installing the SATA Slim

3.2 Installing the Compact Flash

3.1 Installing the SATA Slim

[SPEC]

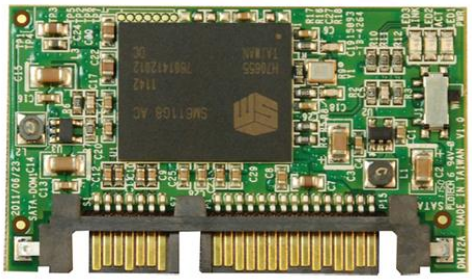

JEDEC SFF-8156 standard form factor
53 x 32 x 4.0 mm
SDM-SLIM-4G-V
SDM-SLIM-8G-V
SDM-SLIM-16G-V

[STEP]

1. Remove the eight screws in a diagonal pattern as the image below.

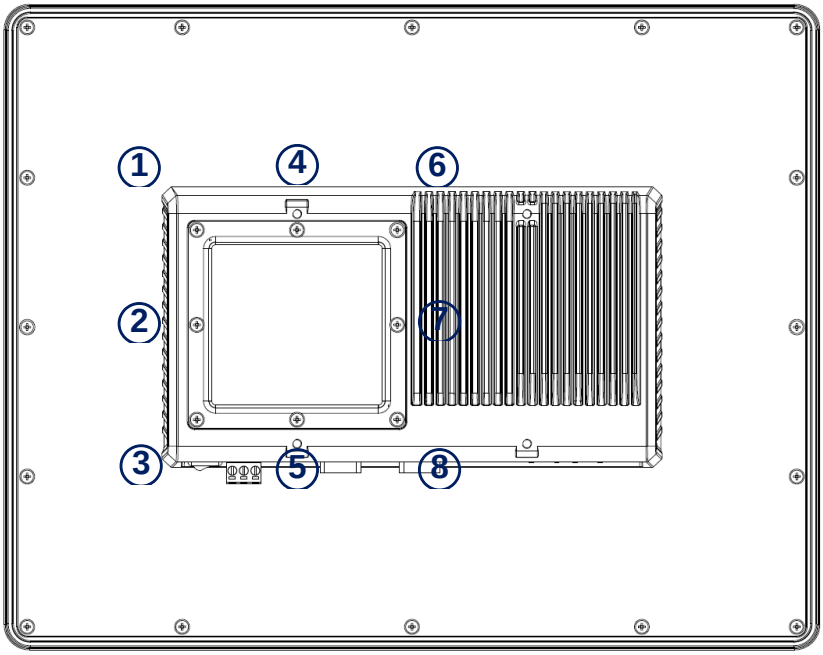

2. Place the SATA slim horizontally aligned and gently put into the socket until you feel a click.

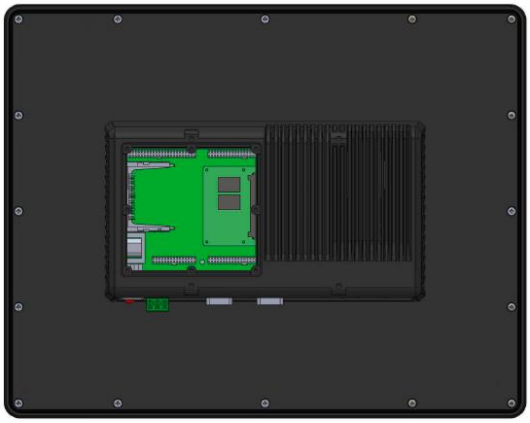

3. Insert all eight screws into the screw holes.

3.2 Installing the Compact Flash

[STEP]

1. Remove the nine screws in a diagonal pattern as the image below.

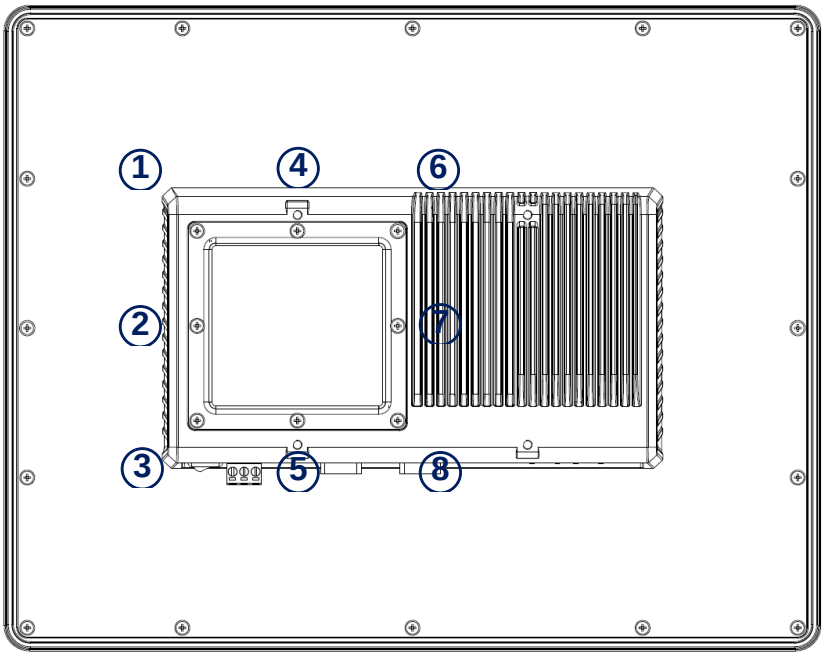

2. Gently insert the CF card along the track. Caution: Please watch out for the direction which the CF card has to be face up.

3. Insert all nine screws into the screw holes.

Ch. 4

Driver Installation

4.1 PPC-150T Development Note

4.2 BIOS Default Setting

VGA

The Vortex86DX2 processor is integrated RDC Display chip which is an ultra-low powered graphics chipset with total power consumption at around 1-1.5 W.

LAN

The Vortex86DX2 processor is integrated 10/100Mbps Ethernet controller that supports both 10/100BASE-T and allows direct connection to your 10/100Mbps Ethernet based Local Area Network for full interaction with local servers, wide area networks such as the Internet.

I/O and IRQ settings can be done by software with the supplied utility software, or it can be set for Plug and Play compatibility. The controller supports: Half / Full-Duplex Ethernet function to double channel bandwidth, auto media detection.

AUDIO

The ALC262 series are 4-Channel High Definition Audio Codecs with UAA (Universal Audio Architecture) featuring two 24-bit stereo DACs and three 20-bit stereo ADCs, they are designed for high performance multimedia desktop and laptop systems. The ALC262 series incorporates proprietary converter technology to achieve over 100dB Signal-to-Noise ratio playback quality; easily meeting PC2001 requirements and also bringing PC sound quality closer to consumer electronic devices.

OPERATING SYSTEM SUPPORT

The PPC-150T provides the VGA and LAN drivers for Linux, Windows CE, Windows XP Professional, and Windows Embedded standard (XPE).

Please get the drivers from ICOP technical support URL: _____

PPC-150T also supports most of the popular Linux distributions, for more detail information, please visit DMP official website: vortex86dx2

4.1 PPC-150T Development Note

< WINDOWS DEVELOPMENT GUIDE >

Windows Embedded CE 6.0 BSP, Windows Embedded Compact 7 BSP, and Windows Embedded Standard 2009 trial image with development notes, please visit technical website to get more information at _____.

< LINUX INSTALLATION NOTE>

Please visit Linux technical website to get more information at ftp://ftp.dmp.com.tw/Linux_DEMO/Vortex86_Linux_Support_List_revised.htm.

4.2 BIOS Default Setting

If the system cannot be booted after BIOS changes are made, Please follow below procedures in order to restore the CMOS as default setting.

End	Press < **End** > Key, when the power on
Del	Press < **Del** > to enter the AMI BIOS setup
F9	Press < **F9** > to Load Optimized defaults
F10	Press < **F10** > to Save configuration changes and exit setup

Warranty

This product is warranted to be in good working order for a period of one year from the date of purchase. Should this product fail to be in good working order at any time during this period, we will, at our option, replace or repair it at no additional charge except as set forth in the following terms. This warranty does not apply to products damaged by misuse, modifications, accident or disaster. Vendor assumes no liability for any damages, lost profits, lost savings or any other incidental or consequential damage resulting from the use, misuse of, originality to use this product. Vendor will not be liable for any claim made by any other related party. Return authorization must be obtained from the vendor before returned merchandise will be accepted. Authorization can be obtained by calling or faxing the vendor and requesting a Return Merchandise Authorization (RMA) number. Returned goods should always be accompanied by a clear problem description.

All Trademarks appearing in this manuscript are registered trademark of their respective owners. All Specifications are subject to change without notice.
©ICOP Technology Inc. 2014