User's Manual

HMI-043T with RFID

DMP Vortex86 EXm Processor

Compact Panel PC with 4.3" Touchscreen

HMI-043T-EM41N-BF / BF01 / BF02

HMI-043T-EM41B-BF / BF01 / BF02

HMI-043T-EM42N-BF / BF01 / BF02

HMI-043T-EM42B-BF / BF01 / BF02

(Version 1.2A)

REVISION

DATE	VERSION	DESCRIPTION
2016/08/17	Version 1.0A	New Release
2016/09/09	Version 1.1A	1. Correct the website Section 3.1 2. Correct Memory description of Hardware Specifications
2017/04/14	Version 1.2A	1. Add serial number code on section 1.5. 2.Add pin assignment and standard pinout for PoE on RJ45.

SAFETY INFORMATION

- Read these Safety instructions carefully.
- Please carry the unit with both hands, handle carefully.
- Make sure the voltage of the power source is correct before connecting the equipment to the power outlet.
- Do not expose your Panel PC to rain or moisture in order to prevent shock and fire hazard.
- Input voltage rated +5VDC for HMI-043T-EM4XX-BF series and +7~24VDC for HMI-043T-EM4XX-BFXX series.
- Operating temperature between -20~+60˚C (-4F~+140°F).
- Keep HMI-043T away from humidity.
- Never touch un-insulated terminals or wire unless your power adaptor is disconnected.
- Locate your Panel PC as close as possible to the socket outline for easy access and to avoid force caused by entangling of your arms with surrounding cables from the Panel PC.
- USB connectors are not supplied with Limited Power Sources.
- If the equipment is not used for a long time, disconnect it from the power source to avoid damage by transient overvoltage.

WARNING!

DO NOT ATTEMPT TO OPEN OR TO DISASSEMBLE THE CHASSIS (ENCASING) OF THIS PRODUCT. PLEASE CONTACT YOUR DEALER FOR SERVICING FROM QUALIFIED TECHNICIAN.

Content

Content iv
Ch. 1 General Information 1
1.1 Product Description 2
1.2 Product Specifications 3
1.3 Inspection standard for TFT-LCD Panel 6
1.4 Product Dimensions 8
1.5 Ordering Information 10
Ch. 2 System Installation 13
2.2 Connector Summary 16
2.3 Connector Pin Assignments 18
2.4 Connector I/O & LEDs Overview 23
2.5 Wall Mount Kit Overview **(Optional)** 25
Ch. 3 Driver Installation 27
3.1 HMI-043T Development Note 29
Warranty 30

Ch. 1

General Information

1.1 Product Description

1.2 Product Specifications

1.3 Inspection standard for TFT-LCD Panel

1.4 Product Dimensions

1.5 Odering Information

1.1 Product Description

ICOP Technology Inc. is proudly going to release a brand new HMI, which offers fanless design, low power consumption, and IP65 front panel. The HMI-043T with RFID is powered by DMP Vortex86Exm SoC, the new generation SoC of Vortex86 family, which is included 128MB/256MB memory, eMMC Flash memory, and RFID reader. The resistive touch panel with LED backlight TFT LCD increases operation convenience and visibility in outdoor environments. The ultra-compact and thin exterior design is perfect for the present demanding embedded and productive applications.

The new HMI-043T with RFID inherited PDX/PMX-series' smooth appearance and ultra-texture aluminum exterior design to make your industrial applications look more stylish. The versatile I/O ports, 10/100Mps Ethernet, RS/232/485 , GPIO and Can bus etc. can fulfill fundamental functions. Our consistent advantages feature stable performance, extended working temperature support, low power consumption and fanless design. The open frame model can be accommodated connectivity requirements to industrial machine platforms and industrial automation equipment's needs.

HMI-043T with RFID is not only supporting DOS, Linux, and Windows Embedded CE, but also compatible with Arduino platform, which is an open-source electronics prototyping platform based on flexible, easy to use hardware and software to meet ready-to-market demand and provide competitive advantages for customers.

1.2 Product Specifications

HARDWARE SPECIFICATIONS

CPU	DMP Vortex86Exm 400MHz
BIOS	Coreboot BIOS
Cache	L1:16KB I-Cache, 16KB D-Cache L2: 4-way, 128KB L2 Cache
Memory	Integrated 128MB / 256MB DDRIII
Nand-Flash	512MB/4GB eMMC onboard (Optional)
Wireless / Network	Integrated 10/100Mbps Ethernet x 1 **HF RFID Reader x 1**
PoE **(Optional)**	**Optional** upon 10/100Mbps Ethernet port x 1 Support IEEE 802.3AT, PoE/PD (Optional for HMI-043T-EM4XX-BFXX series only)
Interface	**HMI-043T-EM4XX-BF series:** Mic-in x 1 SPK-L , SPK-R (connector) x 1 RS-232 x 1 RS-485 x 2 Can bus x 1 8-bit GPIO x 1 USB ports (Ver2.0) x 2
	HMI-043T-EM4XX-BFXX series: RS-232 x 1 or RS-485 x 1 USB ports (Ver2.0) x 1 Can bus x 1 (Optional)

MECHANICAL & ENVIRONMENT

Power Requirement	**HMI-043T-EM4XX-BF series:** +5VDC **HMI-043T-EM4XX-BFXX series:** +7 ~ 24VDC
Power Consumption	**HMI-043T-EM4XX-BF series:** +5V@2A **HMI-043T-EM4XX-BFXX series:** +12V@1A
Operating Temperature	0~+50°C (+32~+122°F) / -20~+60°C (-4~+140°F)
Storage Temperature	-30~+70°C (-22~ +158°F)
Operating Humidity	0% ~ 90% Relative Humidity, Non-Condensing
Dimensions	**HMI-043T-EM4XX-BF series:** 129.1 x 95.0 x 13.9mm (5.08 x 3.74 x 0.55 inches) **HMI-043T-EM4XX-BFXX series:** 129.1 x 95.0 x 34.3mm (5.08 x 3.74 x 1.35 inches)
Weight	**HMI-043T-EM4XX-BF series:** 165g **HMI-043T-EM4XX-BFXX series:** 350g

LCD SPECIFICATIONS

Display Type	4.3” WQVGA TFT LCD
Backlight life	20,000 hrs
Display Resolution	480(W) x 272(H)
Luminance (cd/m^2)	280 cd/m^2
Contrast Ratio	450 : 1
Display Color	16.7M
Pixel Configuration	R.G.B Vertical Stripe
Viewing Direction	6 o’clock
Viewing Angle	Vertical 120°, Horizontal 140°
LED Life Time	20,000 hrs

TOUCHSCREEN

Type	Analog Resistive
Resolution	Continuous
Surface Properties	3H / Anti-Glare
Transmittance	80%
Controller	PS/2 interface
Software Driver	DOS / Linux / WinCE
Durability	1 million

1.3 Inspection standard for TFT-LCD Panel

DEFECT TYPE			LIMIT						Note
VISUAL DEFECT	INTERNAL	SPOT	φ＜0.15mm			Ignore			Note1
			0.15mm≦φ≦0.5mm			N≦4			
			0.5mm＜φ			N=0			
		FIBER	0.03mm<W≦0.1mm, L≦5mm			N≦3			Note1
			1.0mm＜W, 1.5mm＜L			N=0			
		POLARIZER BUBBLE	φ＜0.15mm			Ignore			Note1
			0.15mm≦φ≦0.5mm			N≦2			
			0.5mm＜φ			N=0			
		Mura	It' OK if mura is slight visible through 6%ND filter						
ELECTRICAL DEFECT	BRIGHT DOT		A Grade			B Grade			
			C Area	O Area	Total	C Area	O Area	Total	Note3
			N≦0	N≦2	N≦2	N≦2	N≦3	N≦5	Note2
	DARK DOT		N≦2	N≦3	N≦3	N≦3	N≦5	N≦8	
	TOTAL DOT		N≦4			N≦5	N≦6	N≦8	Note2
	TWO ADJACENT DOT		N≦0	N≦1 pair	N≦1 pair	N≦1 pair	N≦1 pair	N≦1 pair	Note4
	THREE OR MORE ADJACENT DOT		NOT ALLOWED						
	LINE DEFECT		NOT ALLOWED						

(1) One pixel consists of 3 sub-pixels, including R, G, and B dot. (Sub-pixel = Dot)

(2) Little bright Dot acceptitable under 6% ND-Filter.

(3) If require G0 grand (Total dot N≦0), please contact region sales.

[Note 1] W: Width[mm]; L: Length[mm]; N: Number; φ: Average Diameter.

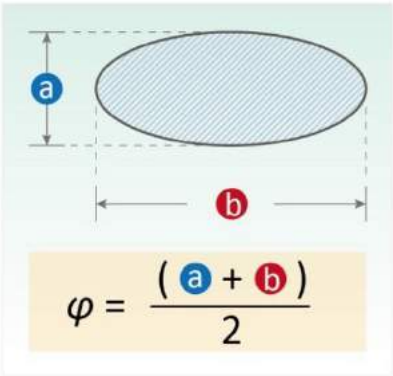

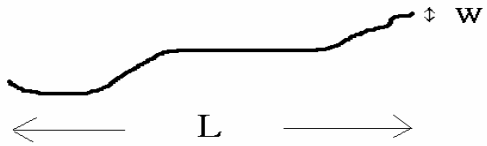

1. fiber

(a) White / Black Spot (b) Polarizer Bubble

[Note 2] Bright dot is defined through 6% transmission ND Filter as following.

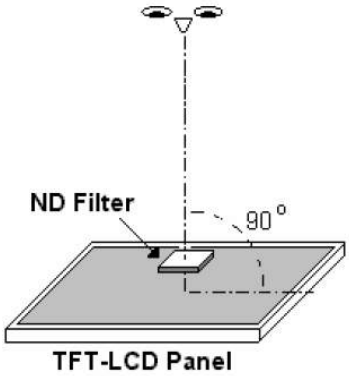

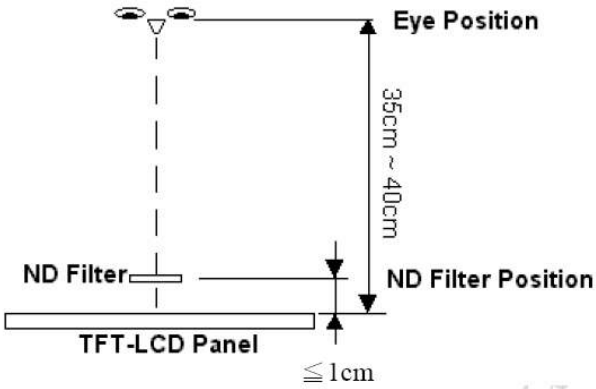

[Note 3] Display area

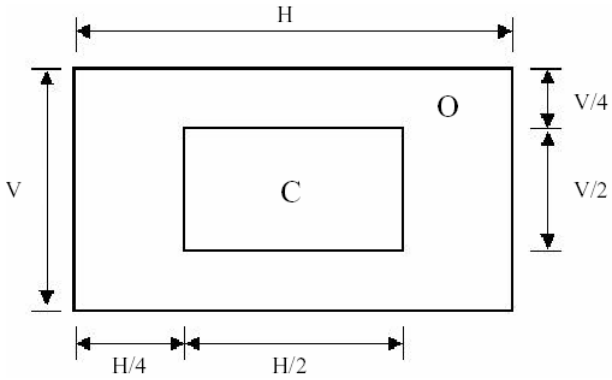

C Area: Center of display area **O Area**: Outer of display area

[Note 4] Judge the defect dot and the adjacent dot as following. Allow below (as A, B, C and D status) adjacent defect dots, including bright and dark adjacent dot. And they will be counted 2 defect dots in total quantity.

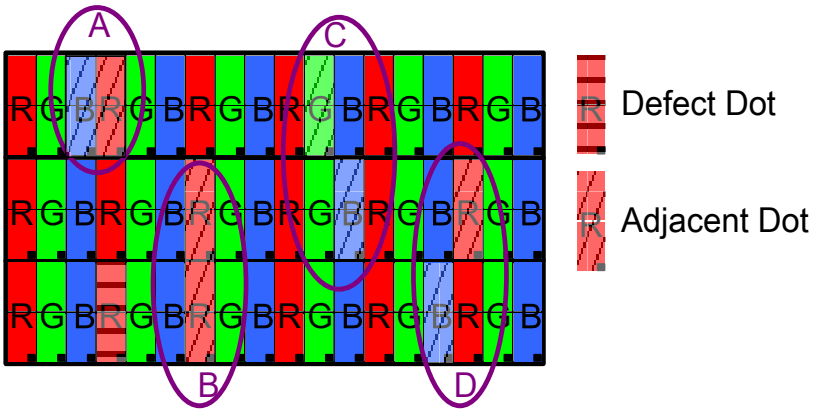

The defects that are not defined above and considered to be problem shall be reviewed and discussed by both parties.

Defects on the Black Matrix, out of Display area, are not considered as a defect or counted.

1.4 Product Dimensions

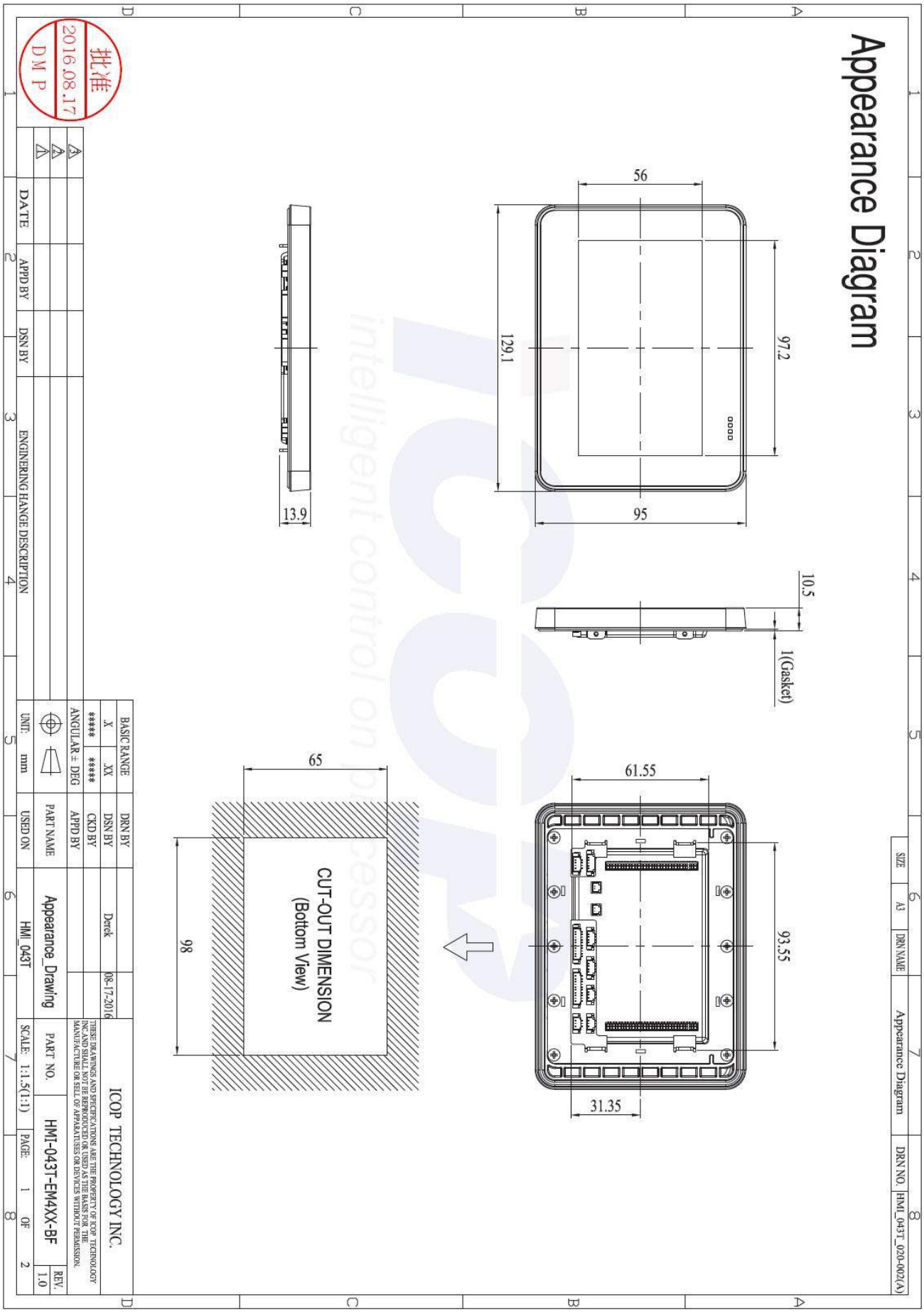

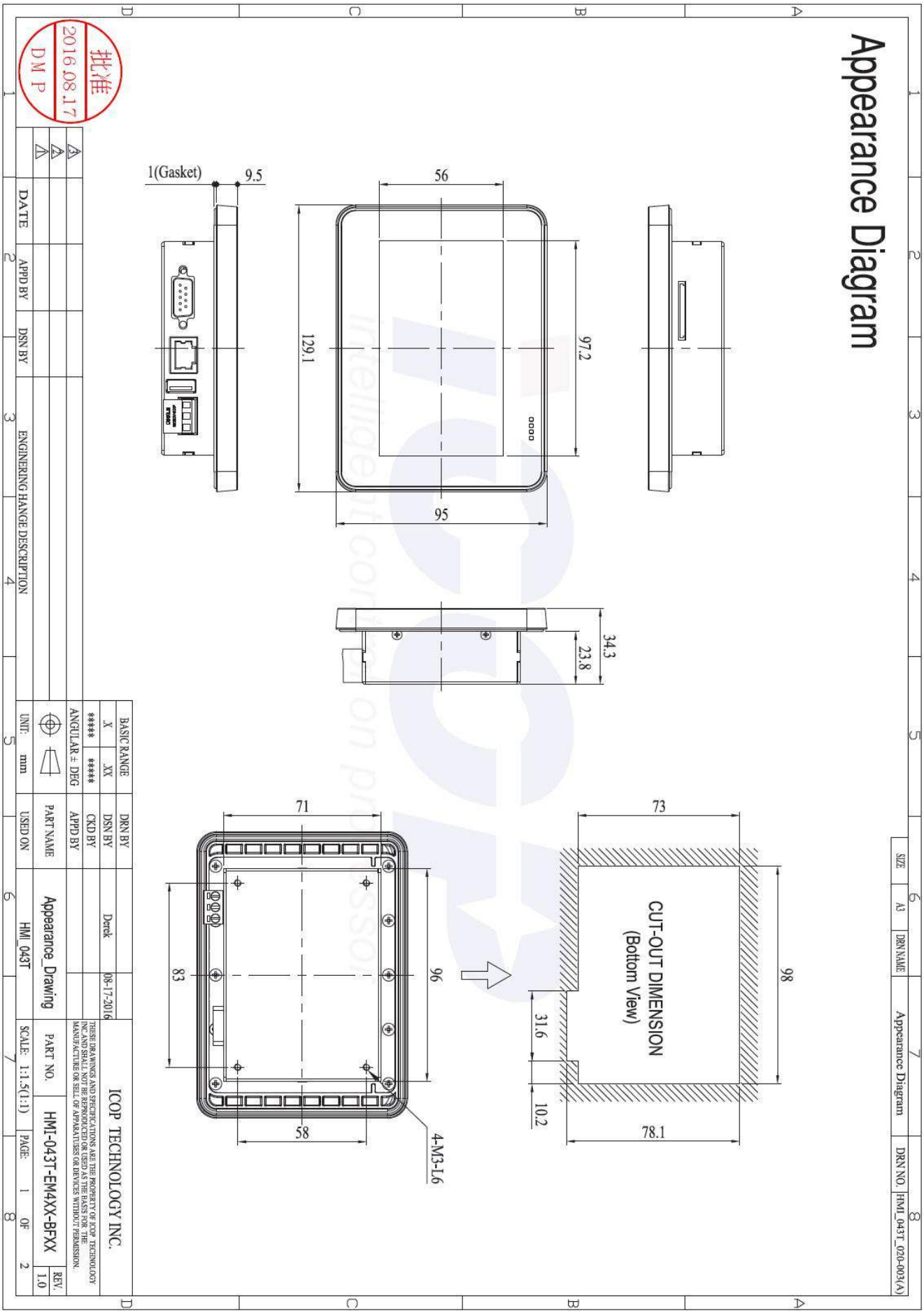
Appearance Diagram
1(Gasket)
9.5
56
97.2
129.1
95
34.3
23.8
71
83
96
58
4-M3-L6
73
98
CUT-OUT DIMENSION
(Bottom View)
31.6
10.2
78.1
批准
2016.08.17
DMP
DATE
APPD BY
DSN BY
ENGINERING HANGE DESCRIPTION
BASIC RANGE
X
.XX
*****
ANGULAR ± DEG
UNIT: mm
DRN BY
DSN BY
CKD BY
APPD BY
PART NAME
USED ON
Derek
08-17-2016
Appearance_Drawing
HMI_043T
ICOP TECHNOLOGY INC.
THESE DRAWINGS AND SPECIFICATIONS ARE THE PROPERTY OF ICOP TECHNOLOGY INC. AND SHALL NOT BE REPRODUCED OR USED AS THE BASIS FOR THE MANUFACTURE OR SELL OF APPARATUSES OR DEVICES WITHOUT PERMISSION.
PART NO.
HMI-043T-EM4XX-BFXX
SCALE: 1:1.5(1:1)
PAGE: 1 OF 2
REV. 1.0
SIZE
A3
DRN NAME
Appearance Diagram
DRN NO.
HMI_043T_020-003(A)

1.5 Ordering Information

SERIAL NUMBER CODE:

Product Code	LCD Size	CPU Type	CPU Clock	RAM	Flash onboard	I/O
HMI	043T	EM(EXm)	3 (300MHz) 4 (400MHz)	1 (128MB) 2 (256MB)	N (No Flash) B (512MB) E (4GB)	O (Open Frame) B (O type + Case) B01 (B type + I/O board with case) B02 (B type + PoE I/O board with case) BC1(B type + CAN I/O board with case) BF (O type + Case + RFID) BF01 (B type + I/O board with case + RFID) BF02 (B type + PoE I/O board with case + RFID) BFC1(B type + CAN I/O board with case + RFID)

1. Product Code：Code 1~3。

   HMI：HMI Series

2. LCD Size：Code 4~7。

   043T：4.3” LCD with touchscreen。

3. CPU Type：Code 8~9。

   EM：Vortex86EXm。

4. CPU Clock：Code 10。

   3：300MHz。 4：400MHz。

5. RAM：Code 11。

   1：128MB。 2：256MB。

6. Flash Onboard：Code 12。

   N：No Flash。 B：512MB。 E：4GB。

7. I/O Code：Code 13~16。

   O：Open Frame type with full function

   B：Box type without I/O Board

   (B01=Standard; B02=with PoE ; BC1=with CAN)

   (BF01=Standard RFID; BF02=RFID with PoE ; BFC1=RFID with CAN)

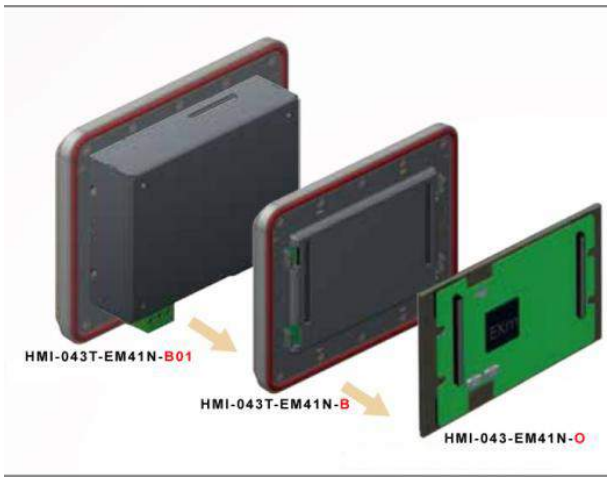

ORDING INFORMATION:

PART NUMBER	DESCRIPTION
HMI-043T-EM41N-BF	4.3” HMI w/128MB/RFID/8MBSPI/2U/1S/485/GPIO /SPK/CAN/Front panel, but without daughter board
HMI-043T-EM41B-BF	4.3” HMI w/128MB/RFID/512MBeMMC/8MBSPI/2U/1S /485/GPIO/SPK/CAN/Front panel, but without daughter board CAN/Front panel, but without daughter board
HMI-043T-EM42N-BF	4.3” HMI w/256MB/RFID/8MBSPI/2U/1S/485/GPIO /SPK/CAN/Front panel, but without daughter board
HMI-043T-EM42B-BF	4.3” HMI OP w/256MB/RFID/512MBeMMC/8MBSPI/2U/1S/485 /GPIO/SPK/CAN//Front panel, but without daughter board
CABLE-265OP-SET	HMI-043T Open Frame cable set for BF or OP type.
HMI-043T-EM41N-BF01	4.3" HMI w/128MB/RFID/SD/USB/RS232/485/DC+7-24V
HMI-043T-EM41N-BF02	4.3" HMI w/128MB/RFID/SD/USB/POE/RS232/485 /DC+7-24V
HMI-043T-EM41B-BF01	4.3" HMI w/128MB/512MB eMMc/RFID/USB /RS232/485/DC+7-24V
HMI-043T-EM41B-BF02	4.3" HMI w/128MB/512MB eMMC/RFID/USB/POE /RS232/485/DC+7-24V
HMI-043T-EM42N-BF01	4.3" HMI w/256MB/RFID/SD/USB/RS232/485/DC+7-24V
HMI-043T-EM42N-BF02	4.3" HMI w/256MB/RFID/USB/POE/RS232/485 /DC+7-24V
HMI-043T-EM42B-BF01	4.3" HMI w/256MB/512MB eMMC/RFID/USB/RS232/485 /DC+7-24V
HMI-043T-EM42B-BF02	4.3" HMI w/256MB/512MB eMMC/RFID/USB/POE /RS232/485/DC+7-24V

PACKING LIST

PART NUMBER	PACKAGE
HMI-043T-EM41N-BF	HMI-043T-EM41N-BF *1
HMI-043T-EM41B-BF	HMI-043T-EM41B-BF *1
HMI-043T-EM42N-BF	HMI-043T-EM42N-BF *1
HMI-043T-EM42B-BF	HMI-043T-EM42B-BF *1
CABLE-265OP-SET (Optional)	CABLE-265OP-485-15 x 3 CABLE-265OP-COM-15 x 1 CABLE-265OP-GPIO-15 x 1 CABLE-265OP-LAN-15 x 1 CABLE-265OP-USB-15 x 1 CABLE-265OP-USB-15-1 x 1
HMI-043T-EM41N-BF01	HMI-043T-EM41N-BF01 *1
HMI-043T-EM41N-BF02	HMI-043T-EM41N-BF02 *1
HMI-043T-EM41B-BF01	HMI-043T-EM41B-BF01 *1
HMI-043T-EM41B-BF02	HMI-043T-EM41B-BF02 *1
HMI-043T-EM42N-BF01	HMI-043T-EM42N-BF01 *1
HMI-043T-EM42N-BF02	HMI-043T-EM42N-BF02 *1
HMI-043T-EM42B-BF01	HMI-043T-EM42B-BF01 *1
HMI-043T-EM42B-BF02	HMI-043T-EM42B-BF02 *1
WLAN KIT (Optional)	USB-WLAN-IPEX-KIT
	WIRELESS-ANTENNA-157MM
	WIRELESS-CABLE-90MM

Ch. 2

System Installation

2.1 CPU Board Outline

2.2 Connector Summary

2.3 Connector Pin Assignments

2.4 Connector I/O & LEDs Overview

2.5 Wall Mount Kit Overview

2.1 CPU Board Outline

HMI-043T-EM4XX-BF type (without daughter board):

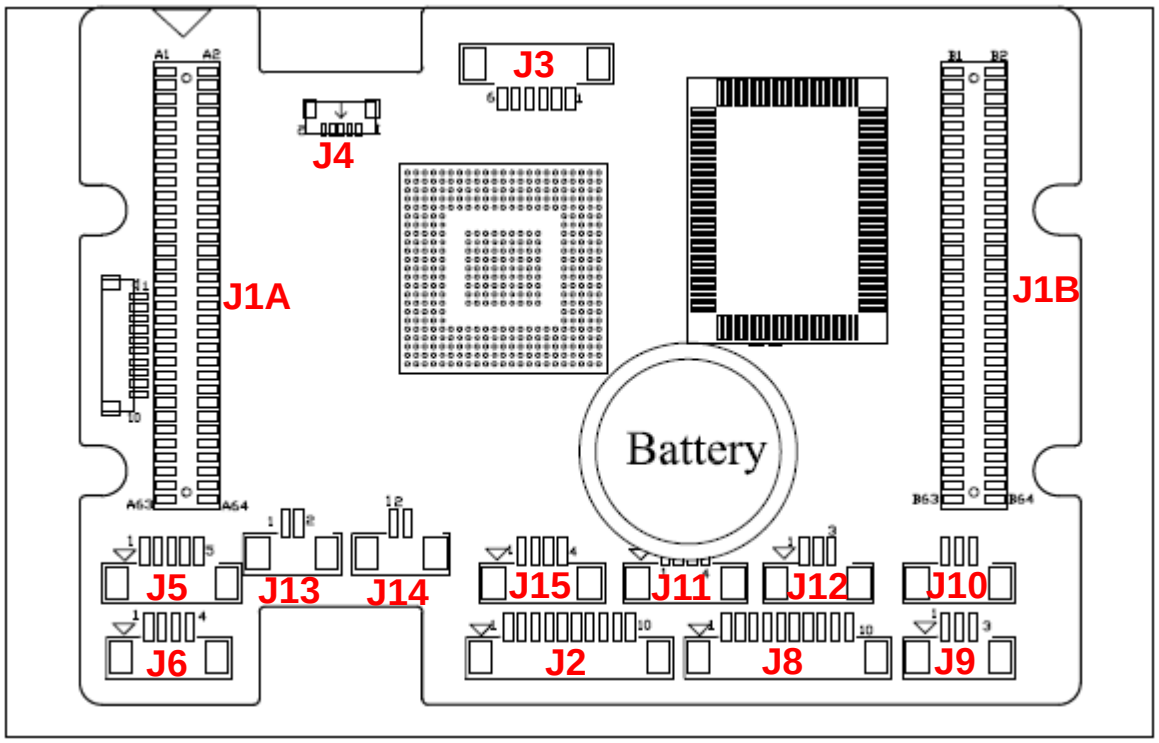

HMI-043T-EM4XX-BF CPU Board

HMI-043T-EM4XX-BFXX type:

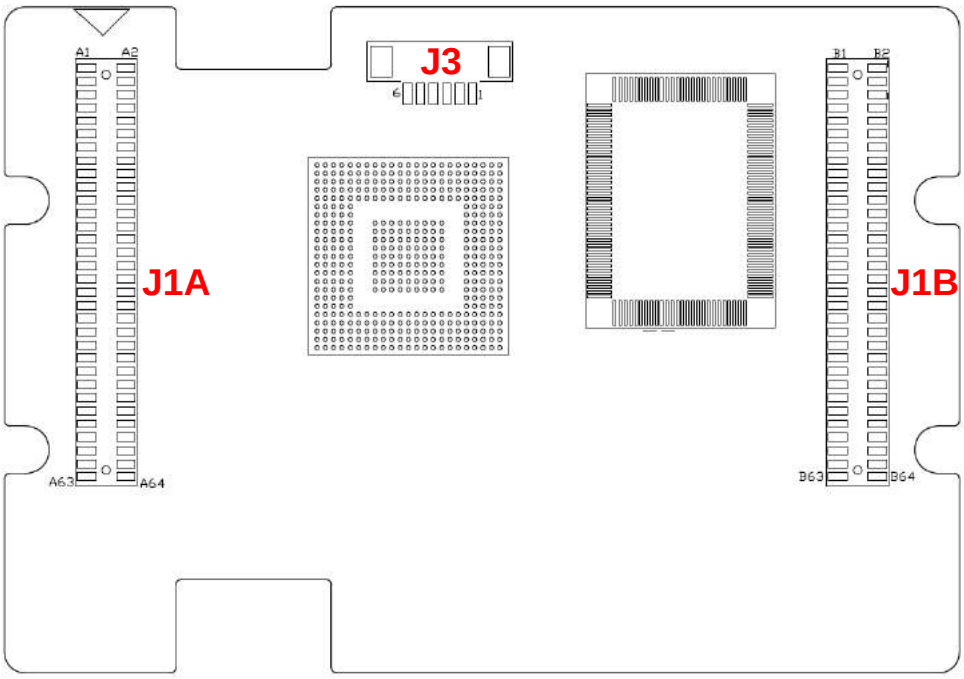

HMI-043T-EM4XX-**BFXX** CPU Board

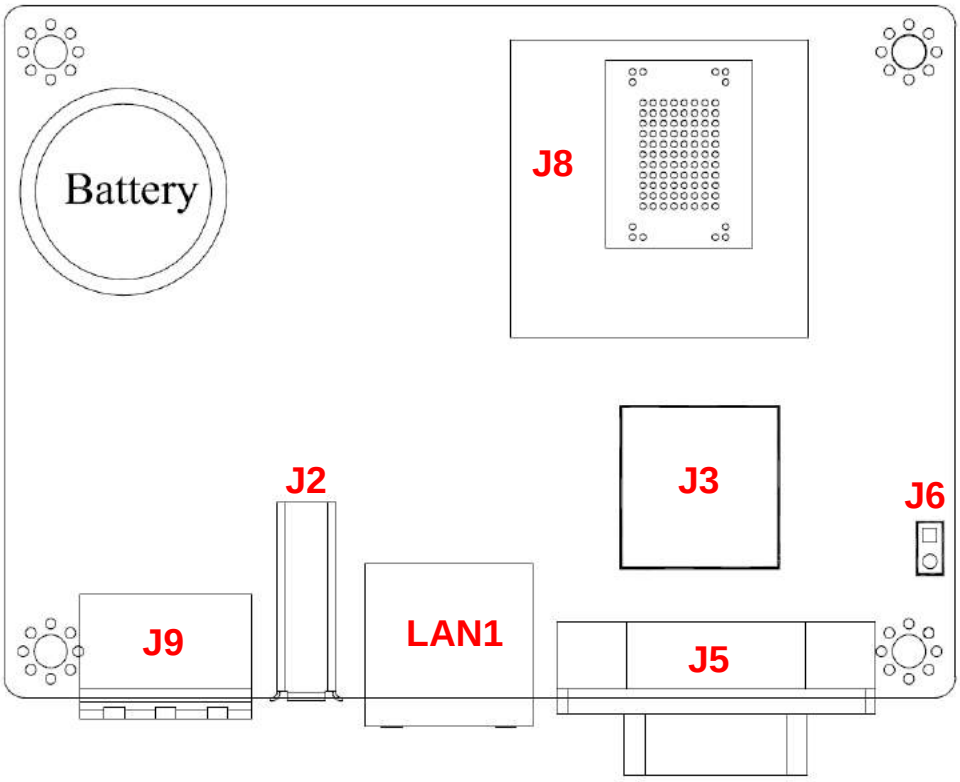

HMI-043T-EM4XX-**BFXX** I/O Board

2.2 Connector Summary

HMI-043T-EM4XX-BF type (without daughter board):

No.	Description	Type of Connections	Pin #
J1A	Expansion slot	1.27mm 32x2-pin female box header	64-pin
J1B	Expansion slot	1.27mm 32x2-pin female box header	64-pin
J2	GPIO	1.25mm 10-pin wafer	10-pin
J3	JTAG (Debug USE)	1.25mm 6-pin wafer	6-pin
J4	USB	0.8mm 5-pin wafer	5-pin
J5	USB	1.25mm 5-pin wafer	5-pin
J6	LAN	1.25mm 4-pin wafer	4-pin
J8	RS-232	1.25mm 10-pin wafer	10-pin
J9	RS-485	1.25mm 3-pin wafer	3-pin
J10	RS-485	1.25mm 3-pin wafer	3-pin
J11	TOUCH	1.25mm 4-pin wafer	4-pin
J12	CAN	1.25mm 3-pin wafer	3-pin
J13	SPK-L	1.25mm 2-pin wafer	2-pin
J14	SPK-R	1.25mm 2-pin wafer	2-pin
J15	MIC-IN	1.25mm 4-pin wafer	4-pin

HMI-043T-EM4XX-BFXX type:

No.	Description	Type of Connections	Pin #
J1A	Expansion slot	1.27mm 32x2-pin female box header	64-pin
J1B	Expansion slot	1.27mm 32x2-pin female box header	64-pin
J2	USB	External USB Connector	6-pin
J3	USB	External USB Connector	6-pin
J5	COM2 RS232/485 or CAN bus	External D-Sub Male Connector	9-pin
J6	COM2: RS232/485 setting	Pin Header, 2.54mm, 1x2	2-pin
J8	SD Card Slot (Optional)	Internal SD Card Socket	
J9	Power Terminal Connector	External Power Plug	3-pin
LAN1	Ethernet	External RJ45 Connector	8-pin

2.3 Connector Pin Assignments

J1A/J1B: Expansion Slot

J1A1		J1A2		J1B1		J1B2	
Pin#	Signal Name	Pin#	Signal Name	Pin#	Signal Name	Pin#	Signal Name
1	RSTDRV	2	GND	1	VCC_IN	2	VCC_IN
3	GP00	4	GP01	3	GP70	4	GP71
5	GP02	6	GP03	5	GP72	6	GP73
7	GP04	8	GP05	7	GP74	8	GP75
9	GP06	10	GP07	9	GP76	10	GP77
11	GP90	12	GP91	11	GP60	12	GP61
13	GP92	14	GP93	13	GP62	14	GP63
15	GP94	16	GP95	15	GP64	16	GP65
17	GP96	18	GP97	17	GP66	18	GP67
19	GND	20	GND	19	GND	20	GND
21	USBD1-	22	USBD2-	21	GP50	22	GP51
23	USBD1+	24	USBD2+	23	GP52	24	GP53
25	AGND	26	AGND	25	GP54	26	GP55
27	ADC_0	28	ADC_1	27	GP56	28	GP57
29	ADC_2	30	ADC_3	29	GP40	30	GP41
31	ADC_4	32	ADC_5	31	GP42	32	GP43
33	ADC_6	34	ADC_7	33	GP44	34	GP45
35	GND	36	GND	35	GP46	36	GP47
37	SATA_TX-	38	SATA_RX-	37	GND	38	GND
39	SATA_TX+	40	SATA_RX+	39	GP30	40	GP31
41	GND	42	HSYNC	41	GP32	42	GP33
43	VGA_R	44	VSYNC	43	GP34	44	GP35
45	VGA_G	46	PCIRST-	45	GP36	46	GP37
47	VGA_B	48	RESET-	47	GP20	48	GP21
49	GND	50	GND	49	GP22	50	GP23
51	LANTX-	52	LANRX-	51	GP24	52	GP25
53	LANTX+	54	LANRX+	53	GP26	54	GP27
55	VBATT	56	VCC1.8_OUT	55	GND	56	GND
57	GP80	58	GP81	57	GP10	58	GP11
59	GP82	60	GP83	59	GP12	60	GP13
61	GP84	62	GP85	61	GP14	62	GP15
63	GP86	64	GP87	63	GP16	64	GP17

HMI-043T-EM4XX-BF type (without daughter board):

GPIO Function Pin

		GPIO PIN	Function		GPIO PIN	Function	
"DM265" P0/COM1	P0	GP00	COM1_DCD1\	P5	GP50	GP50_DETECT_LED	P5
		GP01	COM1_TXD1\		GP51	GP51_ERROR_LED	
		GP02	COM1_RTS1\		GP52	GP52	
		GP03	COM1_RI1\		GP53	GP53_POWER	
		GP04	COM1_RXD1\		GP54		
		GP05	COM1_DTR1\		GP55		
		GP06	COM1_DSR1\		GP56		
		GP07	COM1_CTS1\		GP57		
P1	P1	GP10		P6	GP60	SDA_D2	P6/SD /eMMC
		GP11			GP61	SDA_D3	
		GP12			GP62	SDA_CMO	
		GP13			GP63	SDA_CLK	
		GP14			GP64	SDA_D0	
		GP15			GP65	SDA_D1	
		GP16			GP66	SDA_CD	
		GP17			GP67	SDA_WP	
P2/Bit-Rich-I/O	P2	GP20	SPI_CS_Touch	P7	GP70	GP70	P7
		GP21	SPI_SCLK_Touch		GP71	GP71	
		GP22	SPI_SDI_Touch		GP72	GP72	
		GP23	SPI_SDO_Touch		GP73	GP73	
		GP24	SPI_INT_Touch		GP74	GP74	
		GP25			GP75	GP75	
		GP26	En&PWM Dimming Control		GP76	GP76	
		GP27			GP77	GP77	
P3/COM TXD,RXD	P3	GP30	COM5_TXD5	P8	GP80	HD_BCLK	P8/Bit-Rich-I/O
		GP31	COM5_RXD5		GP81	HD_SYNC	
		GP32	COM6_TXD6		GP82	HD_SDO	
		GP33	COM6_RXD6		GP83	HD_SDI	
		GP34			GP84	HD_RST#	
		GP35			GP85	COM5_TXDEN5	
		GP36			GP86	COM6_TXDEN6	
		GP37			GP87		
P4/Bit-Rich-I/O	P4	GP40	COM3_TXD3	P9	GP90		P9
		GP41	COM3_RXD3		GP91		
		GP42	CAN-TXD		GP92		
		GP43	CAN-RXD		GP93		
		GP44	SPEAKER		GP94		
		GP45			GP95		
		GP46			GP96		
		GP47			GP97		

J2: GPIO

Pin #	Signal Name	Pin #	Signal Name
1	GND	2	GP70
3	GP71	4	GP72
5	GP73	6	GP74
7	GP75	8	GP76
9	GP77	10	VCC

J4: USB

Pin #	Signal Name	Pin #	Signal Name
1	VCC	2	LUSBD1-
3	LUSBD1+	4	GND
5	GGND		

J5: USB

Pin #	Signal Name	Pin #	Signal Name
1	VCC	2	LUSBD2-
3	LUSBD2+	4	GND
5	GGND		

J6: LAN

Pin #	Signal Name	Pin #	Signal Name
1	LTX+	2	LTX-
3	LRX+	4	LRX-

J8: COM

Pin #	Signal Name	Pin #	Signal Name
1	GND	2	RI1
3	DTR1	4	CTS1
5	TXD1	6	RTS1
7	RXD1	8	DSR1
9	DCD1	10	VCC

J9: RS-485

Pin #	Signal Name	Pin #	Signal Name
1	RS485+	2	RS485-
3	GND		

J10: RS-485

Pin #	Signal Name	Pin #	Signal Name
1	RS485+	2	RS485-
3	GND		

J11: TOUCH

Pin #	Signal Name	Pin #	Signal Name
1	Y-	2	X-
3	Y	4	X+

J12: CAN

Pin #	Signal Name	Pin #	Signal Name
1	CAN_H	2	CAN_L
3	GND		

J13: SPK-L

Pin #	Signal Name	Pin #	Signal Name
1	LOUTP	2	LOUTN

J14: SPK-R

Pin #	Signal Name	Pin #	Signal Name
1	ROUTP	2	ROUTN

J15: MIC-IN

Pin #	Signal Name	Pin #	Signal Name
1	VREFOUT	2	GND
3	GND	4	MIC1

HMI-043T-EM4XX-BFXX type:

GPIO Function Pin

		GPIO PIN	Function		GPIO PIN	Function	
P0/COM1	P0	GP00	COM1_DCD1\	P5	GP50	GP50_DETECT_LED	P5
		GP01	COM1_TXD1\		GP51	GP51_ERROR_LED	
		GP02	COM1_RTS1\		GP52	GP52_LED	
		GP03	COM1_RI1\		GP53	GP53_POWER	
		GP04	COM1_RXD1\		GP54		
		GP05	COM1_DTR1\		GP55		
		GP06	COM1_DSR1\		GP56		
		GP07	COM1_CTS1\		GP57		
P1/COM2	P1	GP10		P6	GP60	SDA_D2	P6/SD /eMMC
		GP11			GP61	SDA_D3	
		GP12			GP62	SDA_CMO	
		GP13			GP63	SDA_CLK	
		GP14			GP64	SDA_D0	
		GP15			GP65	SDA_D1	
		GP16			GP66	SDA_CD	
		GP17			GP67	SDA_WP	
P2/Bit-Rich-I/O	P2	GP20	SPI_CS_Touch	P7	GP70		P7
		GP21	SPI_SCLK_Touch		GP71		
		GP22	SPI_SDI_Touch		GP72		
		GP23	SPI_SDO_Touch		GP73		
		GP24	SPI_INT_Touch		GP74		
		GP25			GP75		
		GP26	En&PWM Dimming Control		GP76		
		GP27			GP77		
P3/COM TXD,RXD	P3	GP30		P8	GP80	HD_BCLK	P8/Bit-Rich-I/O
		GP31			GP81	HD_SYNC	
		GP32			GP82	HD_SDO	
		GP33			GP83	HD_SDI	
		GP34			GP84	HD_RST#	
		GP35			GP85		
		GP36			GP86		
		GP37			GP87		
P4/Bit-Rich-I/O	P4	GP40	COM3_TXD3	P9	GP90		P9
		GP41	COM3_RXD3		GP91		
		GP42	CAN-TXD		GP92		
		GP43	CAN-RXD		GP93		
		GP44	SPEAKER		GP94		
		GP45			GP95		
		GP46			GP96		
		GP47			GP97		

J2/J3: USB

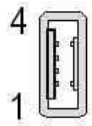

Pin #	Signal Name
1	VCC
2	USB0-
3	USB0+
4	GND
5	GGND
6	GGND

J6: COM2: RS232/485 setting

Pin #	Signal Name
OPEN	ENABLE RS-232
CLOSE	ENABLE RS-485

J9: Power Connector DC-IN 24V

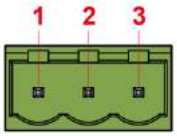

Pin #	Signal Name
1	+7~24V
2	GND
3	FG

J5: COM2 RS-232/485

(Change setting by J6 Jumper)

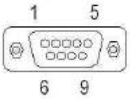

Pin #	Signal Name	Pin #	Signal Name
1	DCD2/ RS485-	**2**	RXD2/ RS485+
3	TXD2	**4**	DTR2
5	GND	**6**	DSR2
7	RTS2	**8**	CTS2
9	RI2		

LAN1

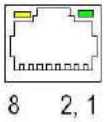

Pin #	Signal Name	Pin #	Signal Name
1	FTXD+	2	FTXD-
3	FRXIN+	4	NC
5	NC	6	FRXIN-
7	NC	8	NC

J5: CAN bus (Optional)

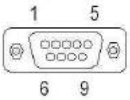

Pin #	Signal Name	Pin #	Signal Name
1		**2**	CAN L
3		**4**	
5		**6**	
7	CAN H	**8**	
9			

RJ45 (Option for PoE)

Pin #	Signal Name	Pin #	Signal Name
1	FTXD+	2	FTXD-
3	FRXIN+	4	**SP2**
5	**SP2**	6	FRXIN-
7	**SP1**	8	**SP1**

IEEE 802.2af standard PoE pinout

Pin	Alternative B
1	
2	
3	
4	Vport Positive
5	Vport Positive
6	
7	Vport Negative
8	Vport Negative

2.4 Connector I/O & LEDs Overview

Front panel

{Note}

1. LED13 is the Power LED light.
2. LED10, LED11, and LED12 can be set by software application like RFID detecting, RFID error light and so on. Please contact your region sales or ICOP technical person to get the sample code for those LED lights control.

I/O overview for HMI-043T-EM4XX-BF:

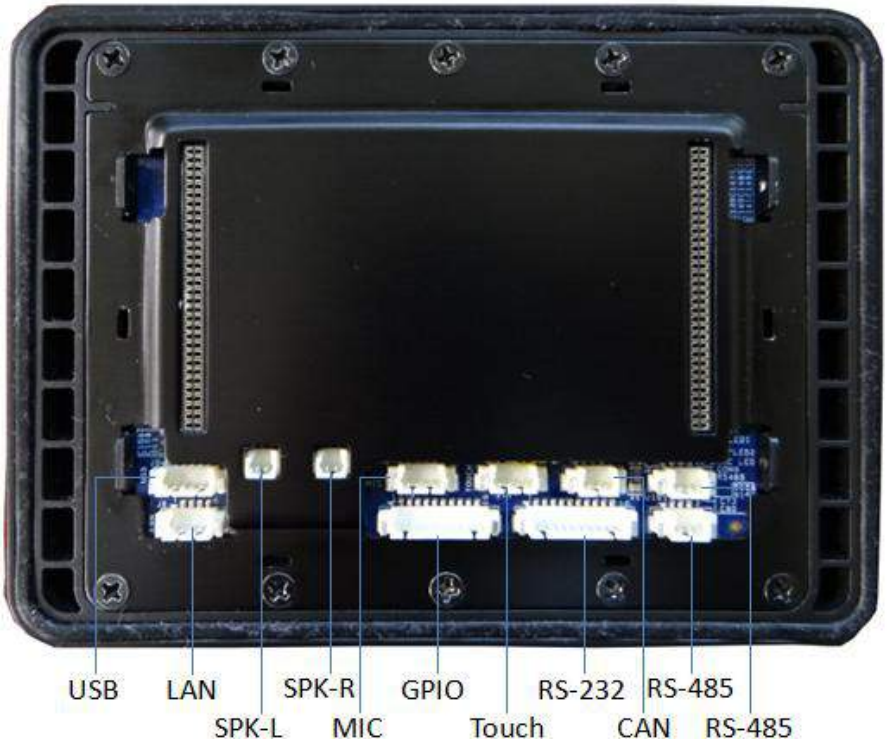

I/O overview for HMI-043T-EM4XX-BFXX:

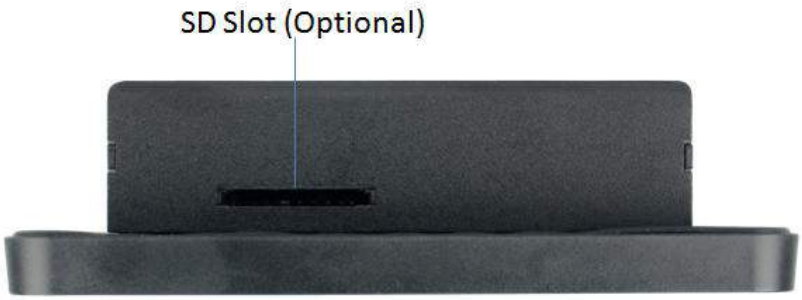

Top Side

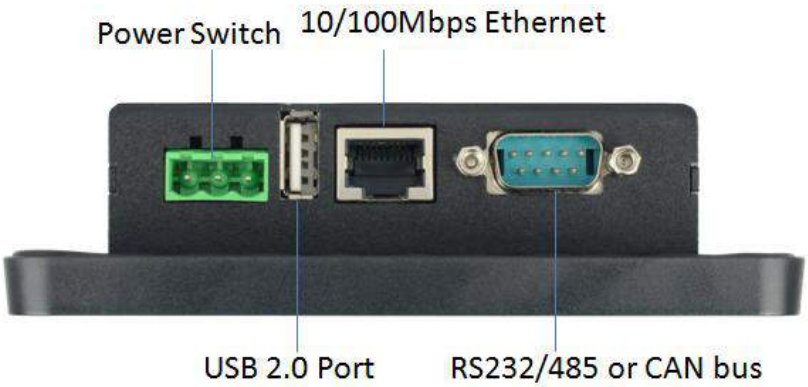

Bottom Side

2.5 Wall Mount Kit Overview (Optional)

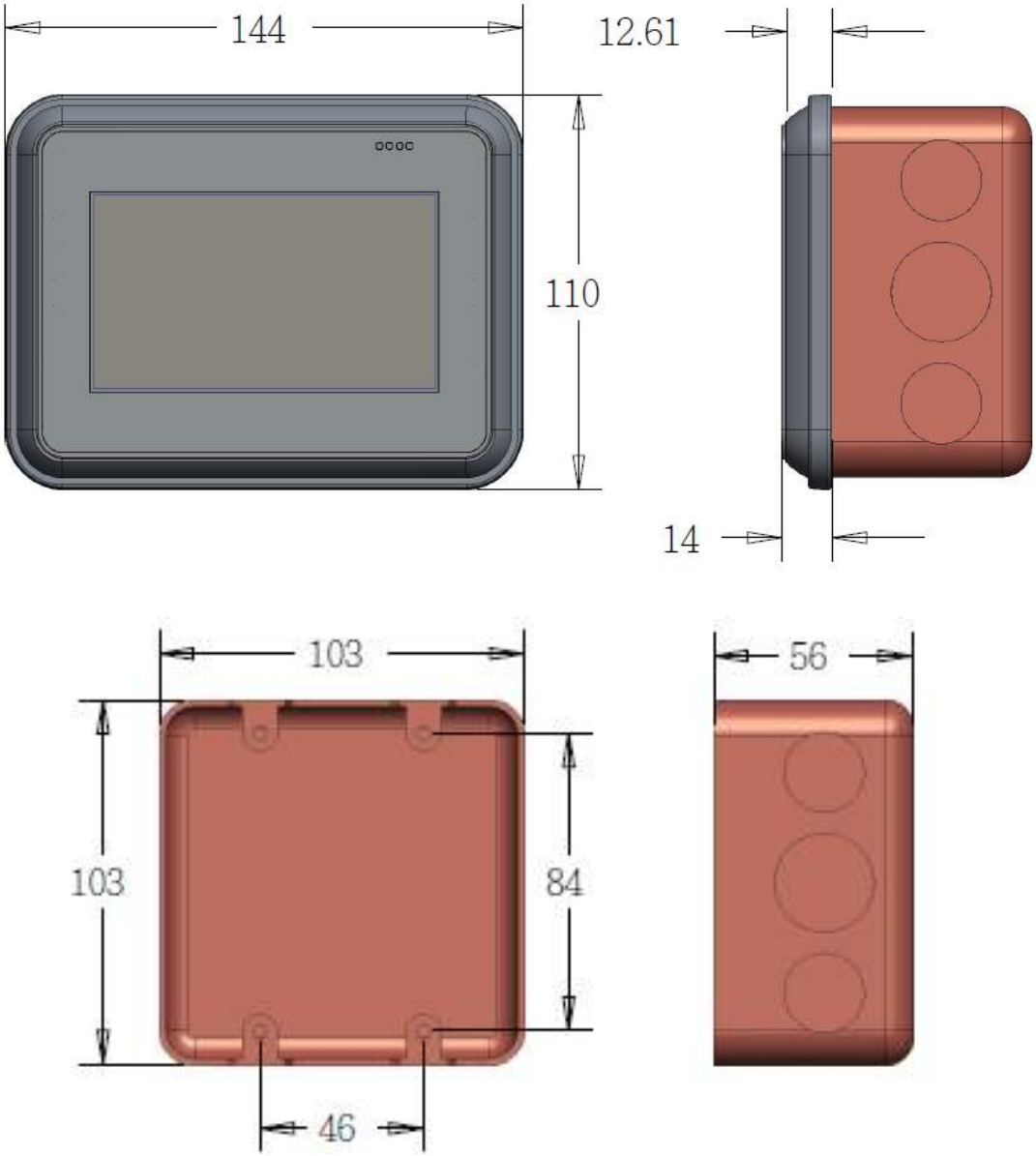

{Note}

1. This mounting kit is only for US type of wall mount box.
2. This mounting is only for HMI-043T-EM4XX-BF type without daughter board and rear case, but not for BF01 and BF02. Please contact your sales region or ICOP to get the detail information.

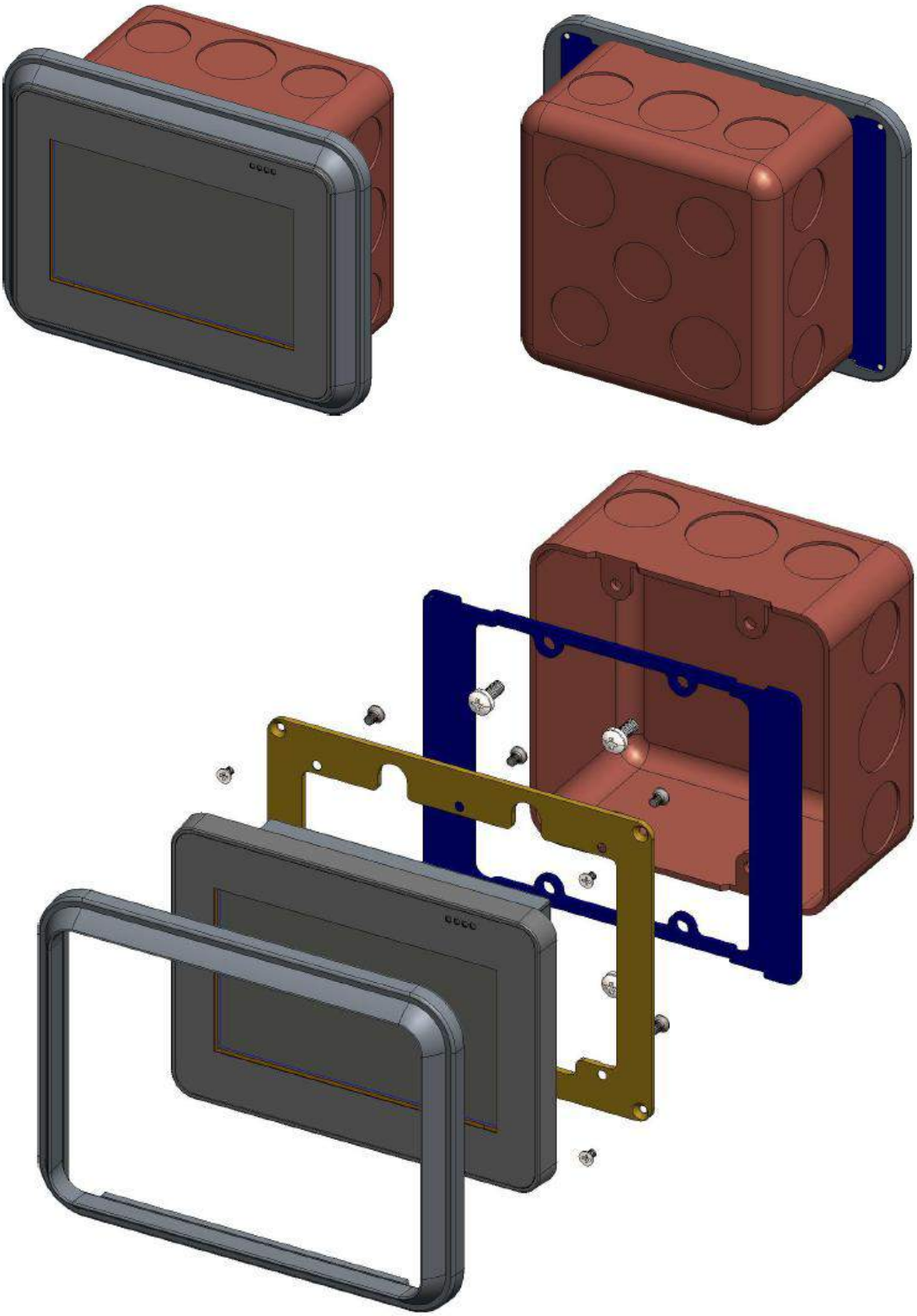

{Note}

Please contact your region sales or ICOP to get the detail information.

Ch. 3

Driver Installation

3.1 HMI-043T Development Note

VGA

Vortex86VGA is a programmable VGA controller in 22mm x 16mm LQFP 128 package. It integrates a PCIe bridge controller and a VGA controller with 4M-Byte Pseudo SRAM memory (16-bit data width). It also incorporates 3.3V DVO digital interfaces to support a third party LVDS/TMDS transmitter.

LAN

The Vortex86DX2 processor is integrated 10/100Mbps Ethernet controller that supports both 10/100BASE-T and allows direct connection to your 10/100Mbps Ethernet based Local Area Network for full interaction with local servers, wide area networks such as the Internet.

I/O and IRQ settings can be done by software with the supplied utility software, or it can be set for Plug and Play compatibility. The controller supports: Half / Full-Duplex Ethernet function to double channel bandwidth, auto media detection.

OPERATING SYSTEM SUPPORT

The HMI-043T provides the VGA and LAN drivers for DOS, Linux, and Windows CE, Please get the drivers from ICOP technical support URL:

HMI-043T is an open-source embedded platform based on Vortex86EXm SoC, easy-to-use hardware and software integrated. This platform can support many x86 O/S as well as those running on the original Arduino base system.

3.1 HMI-043T Development Note

< WINDOWS DEVELOPMENT GUIDE >

Windows Embedded CE 6.0 BSP and development notes, please visit technical website to get more information at http://tech.icop.com.tw/.

< LINUX INSTALLATION NOTE>

Please visit Linux technical website to get more information at ftp://vxdx:gc301@ftp.dmp.com.tw/Linux_DEMO/Vortex86_Linux_Support_List.htm.

Warranty

This product is warranted to be in good working order for a period of one year from the date of purchase. Should this product fail to be in good working order at any time during this period, we will, at our option, replace or repair it at no additional charge except as set forth in the following terms. This warranty does not apply to products damaged by misuse, modifications, accident or disaster. Vendor assumes no liability for any damages, lost profits, lost savings or any other incidental or consequential damage resulting from the use, misuse of, originality to use this product. Vendor will not be liable for any claim made by any other related party. Return authorization must be obtained from the vendor before returned merchandise will be accepted. Authorization can be obtained by calling or faxing the vendor and requesting a Return Merchandise Authorization (RMA) number. Returned goods should always be accompanied by a clear problem description.

All Trademarks appearing in this manuscript are registered trademark of their respective owners. All Specifications are subject to change without notice.
©ICOP Technology Inc. 2017